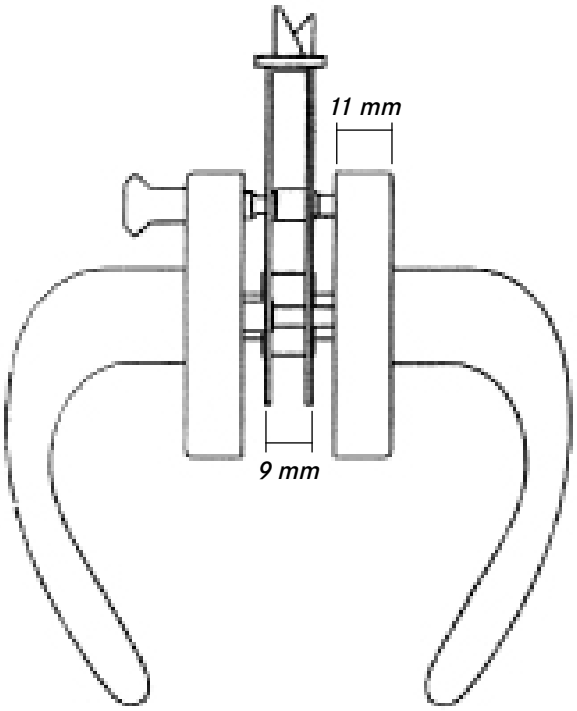
11 mm
9 mm

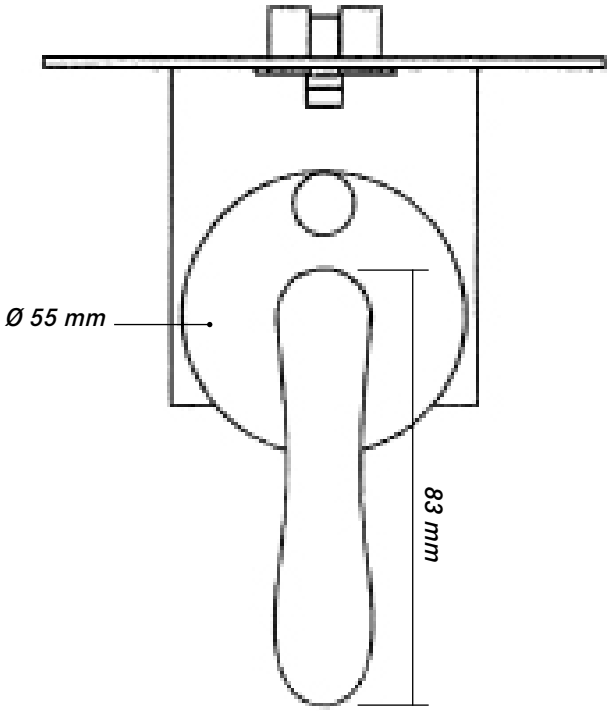
Ø 55 mm
83 mm

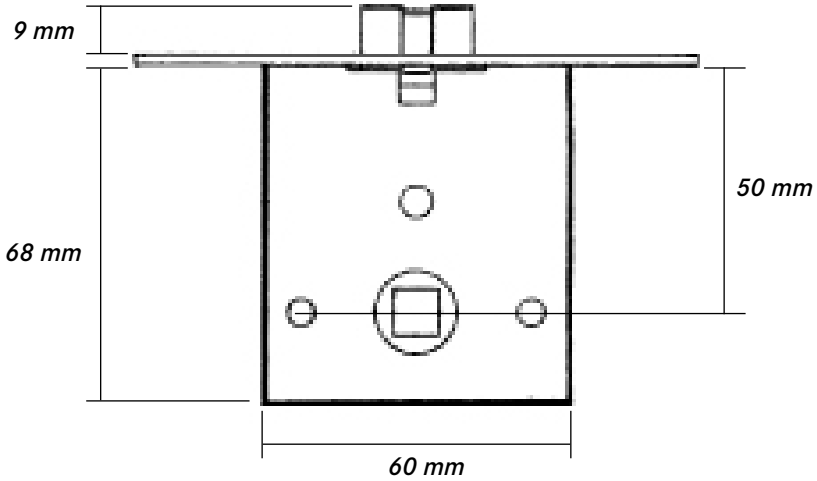
9 mm
50 mm
68 mm
60 mm

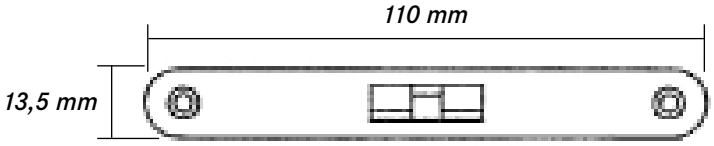
110 mm
13,5 mm