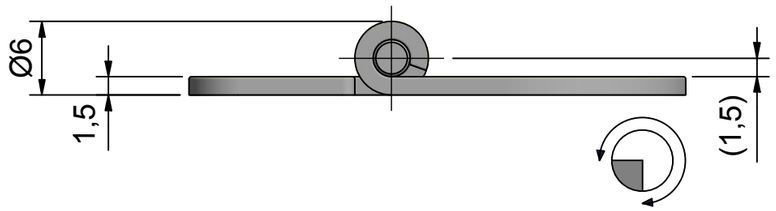

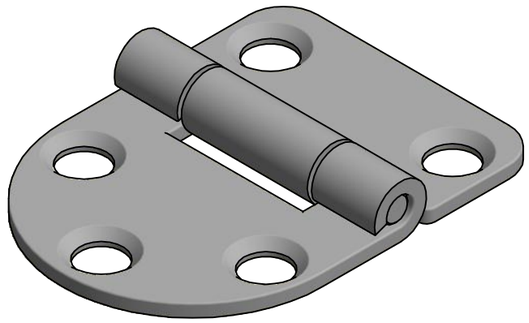

(2 : 1)

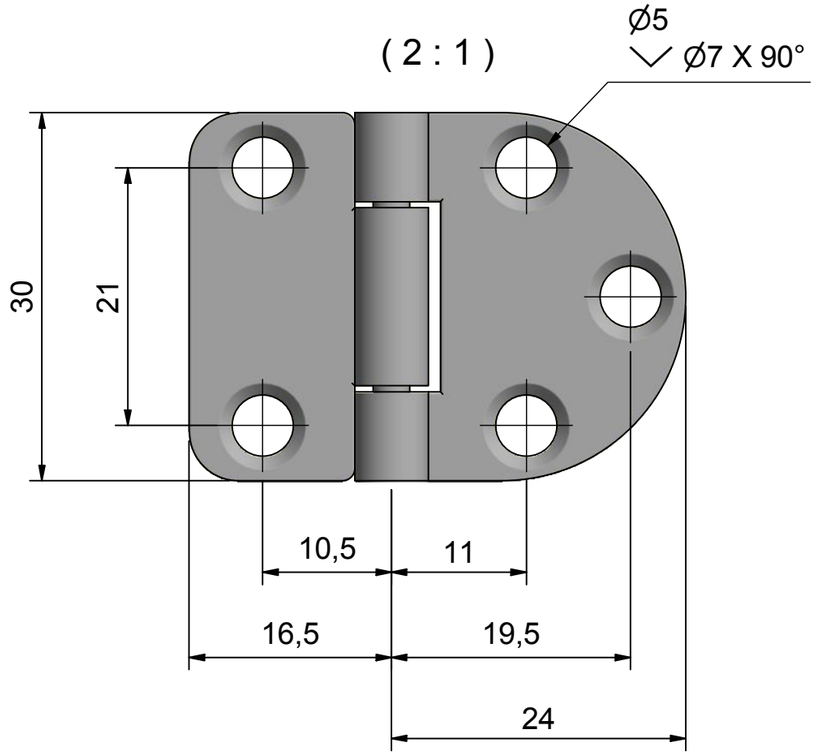

AISI304/Electro polished	Date 191021/HH
Description **Hinge 30x40**	Item no. **440060**