MINN KOTA®

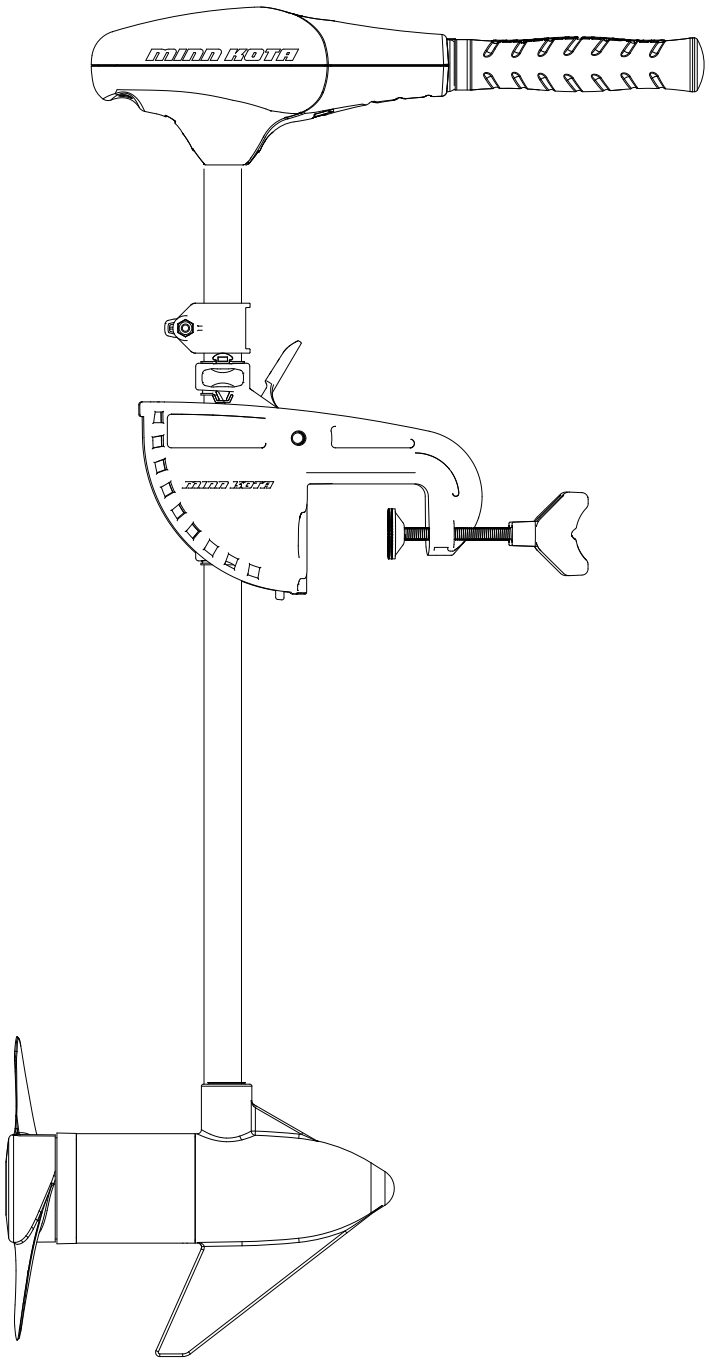

ENDURA

TRANSOM-MOUNT TROLLING MOTOR

User Manual

INTRODUCTION

THANK YOU

Thank you for choosing Minn Kota. We believe that you should spend more time fishing and less time positioning your boat. That's why we build the smartest, toughest, most intuitive trolling motors on the water. Every aspect of a Minn Kota trolling motor is thought out and rethought until it's good enough to bear our name. Countless hours of research and testing provide you the Minn Kota advantage that can truly take you "Anywhere. Anytime." We don't believe in shortcuts. We are Minn Kota. And we are never done helping you catch more fish.

REGISTRATION

Remember to keep your receipt and immediately register your trolling motor. A registration card is included with your motor or you can complete registration on our website at minnkotamotors.com.

SERIAL NUMBER

Your Minn Kota 11-character serial number is very important. It helps to determine the specific model and year of manufacture. When contacting Consumer Service or registering your product, you will need to know your product's serial number. We recommend that you write the serial number down so that you have it available for future reference.

NOTICE: The serial number on your Endura is located on the top of the transom bracket.

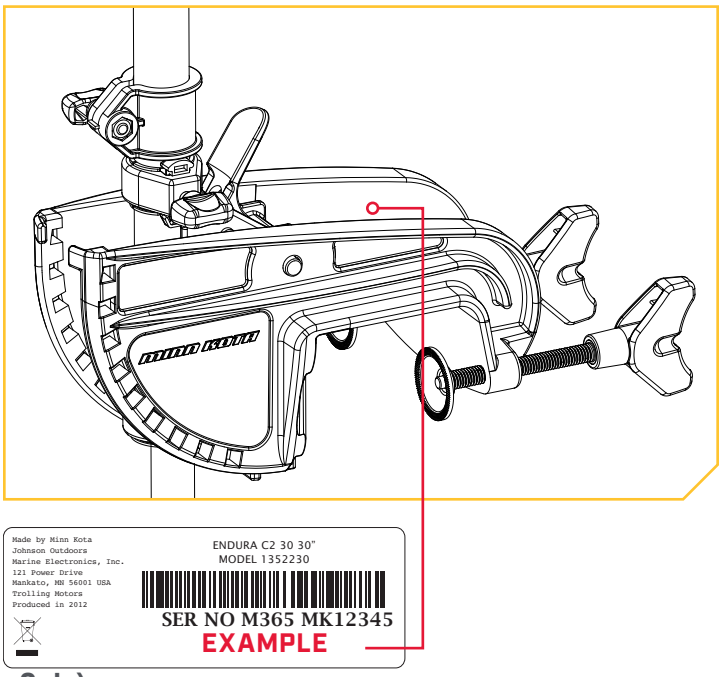

MOTOR INFORMATION (For Consumer Reference Only)

Model: _____

Serial Number: _____

Purchase Date: _____

Store Where Purchased: _____

NOTICE: Do not return your Minn Kota motor to your retailer. Your retailer is not authorized to repair or replace this unit. You may obtain service by: calling Minn Kota at (800) 227-6433; returning your motor to the Minn Kota Factory Service Center; sending or taking your motor to any Minn Kota authorized service center. A list of authorized service centers is available on our website, at minnkotamotors.com. Please include proof of purchase, serial number and purchase date for warranty service with any of the above options.

©2018 Johnson Outdoors Marine Electronics, Inc.

TABLE OF CONTENTS

SAFETY CONSIDERATIONS 4
TWO-YEAR LIMITED WARRANTY 5
KNOW YOUR BOAT 6
FEATURES 7
INSTALLATION 8
Handle Installation 8
Motor Installation 8
BATTERY & WIRING INSTALLATION 10
Boat Rigging & Product Installation 10
Conductor Gauge and Circuit Breaker Sizing Table 10
Selecting the Correct the Batteries 11
Additional Considerations 11
Connecting the Batteries 12
MOTOR WIRING DIAGRAM 13
USING & ADJUSTING THE MOTOR 14
Stowing the Motor 14
Additional Adjustments 15
Adjusting the Depth of the Motor 15
Adjusting the Steering 15
Controlling Speed & Direction with the Tiller 16
Adjusting the Bracket 17
SERVICE & MAINTENANCE 18
Propeller Replacement 18
General Maintenance 19
Troubleshooting 19
For Further Troubleshooting and Repair 20
COMPLIANCE STATEMENTS 21
PARTS DIAGRAM & PARTS LIST 23
NOTES 25

©2018 Johnson Outdoors Marine Electronics, Inc.

SAFETY CONSIDERATIONS

Please thoroughly read the user manual. Follow all instructions and heed all safety and cautionary notices. Use of this motor is only permitted for persons that have read and understood these user instructions. Minors may use this motor only under adult supervision.

⚠ WARNING

You are responsible for the safe and prudent operation of your vessel. We have designed your Minn Kota product to be an accurate and reliable tool that will enhance boat operation and improve your ability to catch fish. This product does not relieve you from the responsibility for safe operation of your boat. You must avoid hazards to navigation and always maintain a permanent watch so you can respond to situations as they develop. You must always be prepared to regain manual control of your boat. Learn to operate your Minn Kota product in an area free from hazards and obstacles.

⚠ WARNING

Never run the motor out of the water, as this may result in injuries from the rotating propeller. The motor should be disconnected from the power source when it is not in use or is off the water. When connecting the power-supply cables of the motor to the battery, ensure that they are not kinked or subject to chafe and route them in such a way that persons cannot trip over them. Before using the motor make sure that the insulation of the power cables is not damaged. Disregarding these safety precautions may result in electric shorts of battery(s) and/or motor. Always disconnect motor from battery(s) before cleaning or checking the propeller. Avoid submerging the complete motor as water may enter the lower unit through control head and shaft. If the motor is used while water is present in the lower unit considerable damage to the motor can occur. This damage will not be covered by warranty.

⚠ WARNING

Take care that neither you nor other persons approach the turning propeller too closely, neither with body parts nor with objects. The motor is powerful and may endanger or injure you or others. While the motor is running watch out for persons swimming and for floating objects. Persons who lack the ability to run the motor or whose reactions are impaired by alcohol, drugs, medication, or other substances are not permitted to use this motor. This motor is not suitable for use in strong currents. The constant noise pressure level of the motor during use is less than 70dB(A). The overall vibration level does not exceed 2,5 m/sec2.

⚠ WARNING

When stowing or deploying the motor, keep fingers clear of all hinge and pivot points and all moving parts. In the event of unexpected operation, remove power leads from the battery.

⚠ WARNING

It is recommended to only use Johnson Outdoors approved accessories with your Minn Kota motor. Using non-approved accessories including to mount or control your motor may cause damage, unexpected motor operation and injury. Be sure to use the product and approved accessories, including remotes, safely and in the manner directed to avoid accidental or unexpected motor operation. Keep all factory installed parts in place including motor and accessory covers, enclosures and guards.

©2018 Johnson Outdoors Marine Electronics, Inc.

WARRANTY

WARRANTY ON MINN KOTA FRESHWATER TROLLING MOTORS

Johnson Outdoors Marine Electronics, Inc. ("JOME") extends the following limited warranty to the original retail purchaser only. Warranty coverage is not transferable.

Minn Kota Limited Two-Year Warranty on the Entire Product

JOME warrants to the original retail purchaser only that the purchaser's new Minn Kota freshwater trolling motor will be materially free from defects in materials and workmanship appearing within two (2) years after the date of purchase. JOME will (at its option) either repair or replace, free of charge, any parts found by JOME to be defective during the term of this warranty. Such repair, or replacement shall be the sole and exclusive liability of JOME and the sole and exclusive remedy of the purchaser for breach of this warranty.

Minn Kota Limited Lifetime Warranty on Composite Shaft

JOME warrants to the original retail purchaser only that the composite shaft of the purchaser's Minn Kota trolling motor will be materially free from defects in materials and workmanship appearing within the original purchaser's lifetime. JOME will provide a new composite shaft, free of charge, to replace any composite shaft found by JOME to be defective during the term of this warranty. Providing a new composite shaft shall be the sole and exclusive liability of JOME and the sole and exclusive remedy of the purchaser for breach of this warranty; **and purchaser shall be responsible for installing, or for the cost of labor to install, any new composite shaft provided by JOME.**

Exclusions & Limitations

This limited warranty does not apply to products that have been used in saltwater or brackish water, commercially or for rental purposes. This limited warranty does not cover normal wear and tear, blemishes that do not affect the operation of the product, or damage caused by accidents, abuse, alteration, modification, shipping damages, negligence of the user or misuse, improper or insufficient care or maintenance. **DAMAGE CAUSED BY THE USE OF OTHER REPLACEMENT PARTS NOT MEETING THE DESIGN SPECIFICATIONS OF THE ORIGINAL PARTS WILL NOT BE COVERED BY THIS LIMITED WARRANTY.** The cost of normal maintenance or replacement parts which are not in breach of the limited warranty are the responsibility of the purchaser. Prior to using products, the purchaser shall determine the suitability of the products for the intended use and assumes all related risk and liability. Any assistance JOME provides to or procures for the purchaser outside the terms, limitations or exclusions of this limited warranty will not constitute a waiver of the terms, limitations or exclusions, nor will such assistance extend or revive the warranty. JOME will not reimburse the purchaser for any expenses incurred by the purchaser in repairing, correcting or replacing any defective products or parts, except those incurred with JOME's prior written permission. **JOME'S AGGREGATE LIABILITY WITH RESPECT TO COVERED PRODUCTS IS LIMITED TO AN AMOUNT EQUAL TO THE PURCHASER'S ORIGINAL PURCHASE PRICE PAID FOR SUCH PRODUCT.**

Minn Kota Service Information

To obtain warranty service in the U.S., the product believed to be defective, and proof of original purchase (including the date of purchase), must be presented to a Minn Kota Authorized Service Center or to Minn Kota's factory service center in Mankato, MN. Any charges incurred for service calls, transportation or shipping/freight to/from the Minn Kota Authorized Service Center or factory, labor to haul out, remove, re-install or re-rig products removed for warranty service, or any other similar items are the sole and exclusive responsibility of the purchaser. Products purchased outside of the U.S. must be returned prepaid with proof of purchase (including the date of purchase and serial number) to any Authorized Minn Kota Service Center in the country of purchase. Warranty service can be arranged by contacting a Minn Kota Authorized Service Center or by contacting the factory at 1-800-227-6433 or email service@minnkotamotors.com. **Products repaired or replaced will be warranted for the remainder of the original warranty period [or for 90 days from the date of repair or replacement, whichever is longer]. For any product that is returned for warranty service that JOME finds to be not covered by or not in breach of this limited warranty, there will be a billing for services rendered at the prevailing posted labor rate and for a minimum of at least one hour.**

NOTICE: Do not return your Minn Kota product to your retailer. Your retailer is not authorized to repair or replace products.

NOTICE: THERE ARE NO EXPRESS WARRANTIES OTHER THAN THESE LIMITED WARRANTIES. IN NO EVENT SHALL ANY IMPLIED WARRANTIES INCLUDING ANY IMPLIED WARRANTIES OF MERCHANTABILITY OR FITNESS FOR PARTICULAR PURPOSE, EXTEND BEYOND THE DURATION OF THE RELEVANT EXPRESS LIMITED WARRANTY. IN NO EVENT SHALL JOME BE LIABLE FOR PUNITIVE, INDIRECT, INCIDENTAL, CONSEQUENTIAL OR SPECIAL DAMAGES. Without limiting the foregoing, JOME assumes no responsibility for loss of use of product, loss of time, inconvenience or other damage.

Some states do not allow limitations on how long an implied warranty lasts or the exclusion or limitation of incidental or consequential damages, so the above limitations and/or exclusions may not apply to you. This warranty gives you specific legal rights and you may also have other legal rights which vary from state to state.

©2018 Johnson Outdoors Marine Electronics, Inc.

KNOW YOUR BOAT

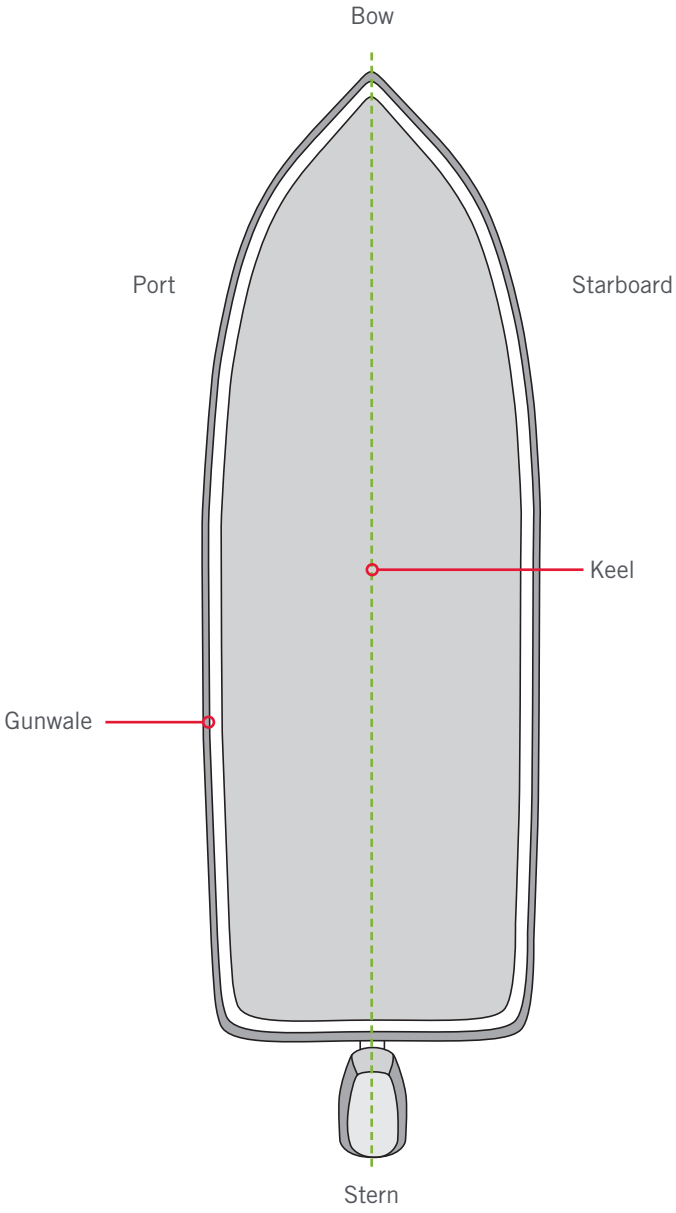

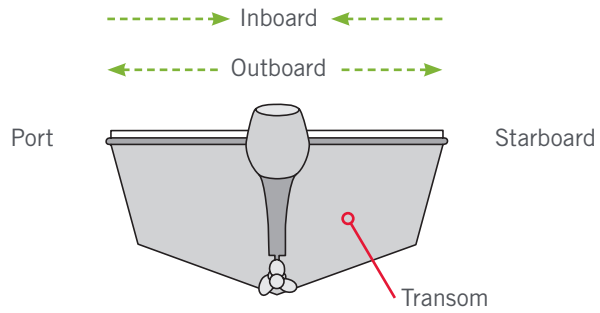

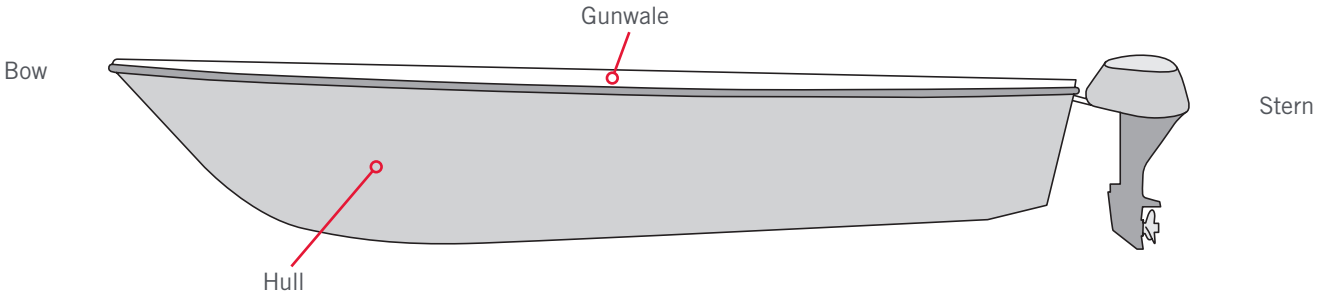

©2018 Johnson Outdoors Marine Electronics, Inc.

FEATURES

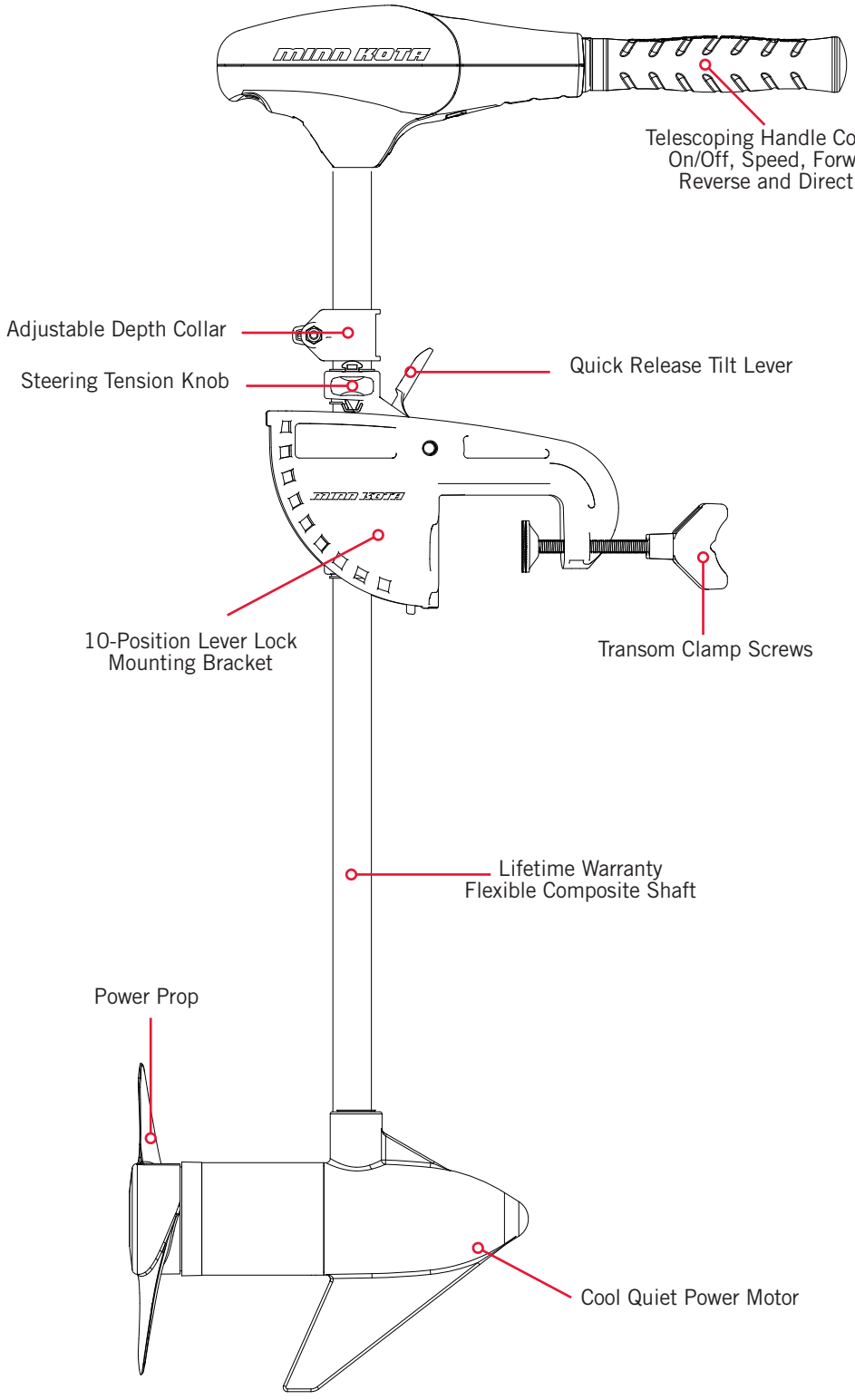

NOTICE: Specifications subject to change without notice. This diagram is for reference only and may differ from your actual motor.

©2018 Johnson Outdoors Marine Electronics, Inc.

INSTALLATION

HANDLE INSTALLATION

1

a. Remove the Wire Clip from the Ball Detent located on the Inner Handle.

b. Install the Outer Handle over the Inner Handle. Position the handles so the Ball Detent and OFF are aligned.

c. Push the Outer Handle into the control box until handle clicks into place. The handle is held in place with locking fingers, so some force may be required to lock the handles together.

d. Once the handle is locked into the control box, it can be rotated and extended for normal use.

e. Once the handle is installed, the assembly is permanent. Do not attempt to remove the handle.

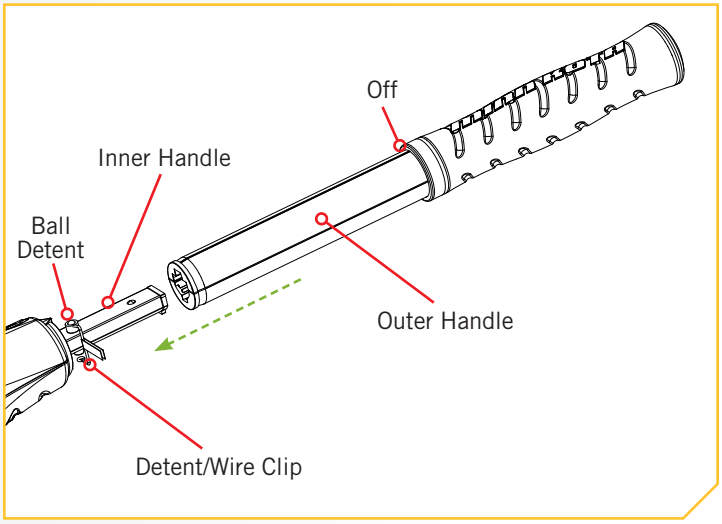

⚠ CAUTION

Once the handle is installed, the installation is permanent. Do not attempt to remove the handle. Removing the handle after it is installed will damage the product.

MOTOR INSTALLATION

1

a. Find a transom area of the boat that is free from obstructions.

b. Open the Transom Clamp Screws on the bracket enough so that it will fit over the top of the boat transom.

c. Place the Lever Lock Mounting Bracket over the top of the boat transom so that the bracket is resting on top of the transom.

d. Verify that there are no obstacles that the control box, handle, or prop might hit while in use that would restrict steering or cause damage to the motor.

e. Tighten down the Transom Clamp Screws to the transom by hand only. Do not use any tools to tighten the clamp screws as this may damage the bracket or your boat.

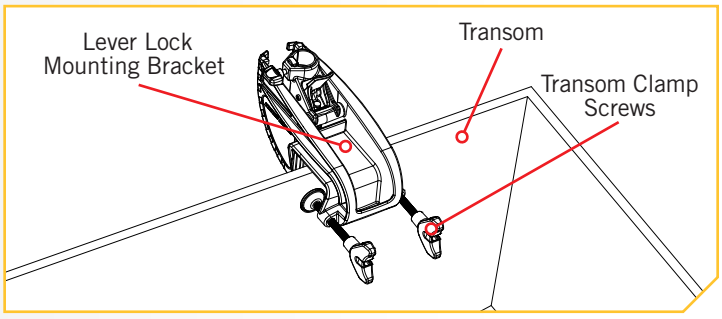

⚠ CAUTION

Over-tightening the Transom Clamp Screws can damage the bracket. Damage to the bracket will prevent the motor from being securely mounted to the transom. Prevent damage to the bracket by not over-tightening it. Only tighten by hand.

©2018 Johnson Outdoors Marine Electronics, Inc.

2

f. We recommend the tilt angle of the motor to be adjusted so that the motor shaft is perpendicular to the water surface when the motor is in use.

g. For transport, always tilt the motor into the boat, such that the motor and prop assembly are completely out of the water and the motor is positioned up close to the Lever Lock Mounting Bracket.

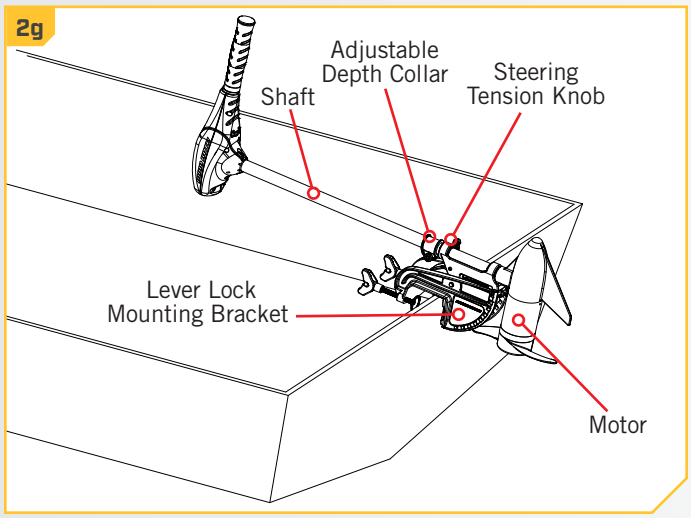

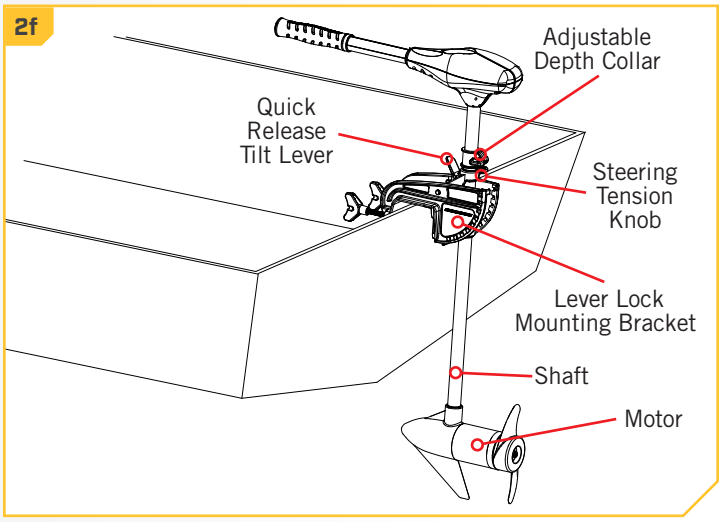

NOTICE: This motor weighs approximately 40 lbs. We recommend having a second person help with the installation.

⚠ WARNING

When the motor is being transported, on water or land, it is important to place the motor completely out of water. The motor should be positioned up close to the Lever Lock Mounting Bracket. Always secure the Steering Tension Knob and slide the Adjustable Depth Collar down to the top of the Steering Tension Knob for added security during transport. This provides a secure stow and holds the motor in place during transportation when it is subject to high levels of shock and vibration. Failure to secure the motor may result in injury or damage to the unit.

©2018 Johnson Outdoors Marine Electronics, Inc.

BATTERY & WIRING INSTALLATION

BOAT RIGGING & PRODUCT INSTALLATION

For safety and compliance reasons, we recommend that you follow American Boat and Yacht Council (ABYC) standards when rigging your boat. Altering boat wiring should be completed by a qualified marine technician. The following specifications are for general guidelines only:

⚠ CAUTION

These guidelines apply to general rigging to support your Minn Kota motor. Powering multiple motors or additional electrical devices from the same power circuit may impact the recommended conductor gauge and circuit breaker size. If you are using wire longer than that provided with your unit, follow the conductor gauge and circuit breaker sizing table below. If your wire extension length is more than 25 feet, we recommend that you contact a qualified marine technician.

⚠ CAUTION

An over-current protection device (circuit breaker or fuse) must be used. Coast Guard requirements dictate that each ungrounded current-carrying conductor must be protected by a manually reset, trip-free circuit breaker or fuse. The type (voltage and current rating) of the fuse or circuit breaker must be sized accordingly to the trolling motor used. The table below gives recommended guidelines for circuit breaker sizing.

CONDUCTOR GAUGE AND CIRCUIT BREAKER SIZING TABLE

This conductor and circuit breaker sizing table is only valid for the following assumptions:

1. No more than 2 conductors are bundled together inside of a sheath or conduit outside of engine spaces.
2. Each conductor has 105° C temp rated insulation.
3. No more than 5% voltage drop allowed at full motor power based on published product power requirements.

Motor Thrust / Model	Max Amp Draw	Circuit Breaker	Wire Extension Length				
			5 feet	10 feet	15 feet	20 feet	25 feet
30 lb.	30	50 Amp @ 12 VDC	10 AWG	10 AWG	8 AWG	6 AWG	4 AWG
40 lb., 45 lb.	42		10 AWG	8 AWG	6 AWG	4 AWG	4 AWG
50 lb., 55 lb.	50	60 Amp @ 12 VDC	8 AWG	6 AWG	4 AWG	4 AWG	2 AWG
70 lb.	42	50 Amp @ 24 VDC	10 AWG	10 AWG	8 AWG	8 AWG	6 AWG
80 lb.	56	60 Amp @ 24 VDC	8 AWG	8 AWG	8 AWG	6 AWG	6 AWG
101 lb.	46	50 Amp @ 36 VDC	8 AWG	8 AWG	8 AWG	8 AWG	8 AWG
Engine Mount 101	50	60 Amp @ 36 VDC	8 AWG	8 AWG	8 AWG	8 AWG	8 AWG
112 lb.	52	60 Amp @ 36 VDC	8 AWG	8 AWG	8 AWG	8 AWG	8 AWG
Engine Mount 160	116	(2) x 60 Amp @ 24 VDC	6 AWG	6 AWG	4 AWG	2 AWG	2 AWG
E-Drive	40	50 Amp @ 48 VDC	10 AWG	10 AWG	10 AWG	10 AWG	10 AWG

NOTICE: Wire Extension Length refers to the distance from the batteries to the trolling motor leads. Consult website for available thrust options. Maximum Amp Draw values only occur intermittently during select conditions and should not be used as continuous amp load ratings.

Reference

United States Code of Federal Regulations: 33 CFR 183 – Boats and Associated Equipment ABYC E-11: AC and DC Electrical Systems on Boats

©2018 Johnson Outdoors Marine Electronics, Inc.

SELECTING THE CORRECT BATTERIES

The motor will operate with any lead acid, deep cycle marine 12 volt battery/batteries. For best results, use a deep cycle, marine battery with at least a 105 amp-hour rating. Maintain battery at full charge. Proper care will ensure having battery power when you need it, and will significantly improve the battery life. Failure to recharge lead-acid batteries (within 12-24 hours) is the leading cause of premature battery failure. Use a multi-stage charger to avoid overcharging. We offer a wide selection of chargers to fit your charging needs. If you are using a crank battery to start a gasoline outboard, we recommend that you use a separate deep cycle marine battery/batteries for your Minn Kota trolling motor. For more information on battery selection and rigging, please visit minnkotamotors.com.

⚠ WARNING

Never connect the (+) and the (–) terminals of the same battery together. Take care that no metal object can fall onto the battery and short the terminals. This would immediately lead to a short and extreme fire danger.

⚠ CAUTION

Refer to "Conductor Gauge and Circuit Breaker Sizing Table" in the previous section to find the appropriate circuit breaker or fuse for your motor. For motors requiring a 60-amp breaker, the Minn Kota MKR-19 60-amp circuit breaker is recommended.

⚠ CAUTION

Please read the following information before connecting your motor to your batteries in order to avoid damaging your motor and/or voiding your warranty.

ADDITIONAL CONSIDERATIONS

Using DC or Alternator Chargers

Your Minn Kota trolling motor may be designed with an internal bonding wire to reduce sonar interference. Most alternator charging systems do not account for this bonding wire, and connect the negative posts of the trolling motor batteries to the negative posts of the crank/starting battery. These external connections can damage connected electronics and the electrical system of your trolling motor, voiding your warranty. Review your charger's manual carefully or consult the manufacturer prior to use to ensure your charger is compatible.

Minn Kota recommends using Minn Kota brand chargers to recharge the batteries connected to your Minn Kota trolling motor, as they have been engineered to work with motors that include a bonding wire.

Additional Accessories Connected to Trolling Motor Batteries

Significant damage to your Minn Kota motor, your boat electronics, and your boat can occur if incorrect connections are made between your trolling motor batteries and other battery systems. Minn Kota recommends using an exclusive battery system for your trolling motor. Where possible, accessories should be connected to a separate battery system. Radios and sonar units should not be connected to any trolling motor battery systems as interference from the trolling motor is unavoidable. If connecting any additional accessories to any trolling motor battery system, or making connections between the trolling motor batteries and other battery systems on the boat, be sure to carefully observe the information below.

©2018 Johnson Outdoors Marine Electronics, Inc.

The negative (-) connection must be connected to the negative terminal of the same battery that the trolling motor negative lead connects to. In the diagrams below this battery is labeled “Low Side” Battery. Connecting to any other trolling motor battery will input positive voltage into the “ground” of that accessory, which can cause excess corrosion. Any damage caused by incorrect connections between battery systems will not be covered under warranty.

Automatic Jump Start Systems and Selector Switches

Automatic jump start systems and selector switches tie the negatives of the connected batteries together. Connecting these systems to the “High Side” Battery or “Middle” Battery in the diagrams below and will cause significant damage to your trolling motor and electronics. The only trolling motor battery that is safe to connect to one of these systems is the “Low Side” Battery.

CONNECTING THE BATTERIES

12 Volt Systems

1. Make sure that the motor is switched off (speed selector on “OFF” or “0”).
2. Connect positive (+) red lead to positive (+) battery terminal.
3. Connect negative (–) black lead to negative (–) battery terminal.

⚠ WARNING

For safety reasons do not switch the motor on until the propeller is in the water. If installing a leadwire plug, observe proper polarity and follow instructions in your boat owner’s manual.

⚠ WARNING

- For safety reasons, disconnect the motor from the battery or batteries when the motor is not in use or while the battery/batteries are being charged.
- Improper wiring of 24/36 volt systems could cause battery explosion.
- Keep leadwire wing nut connections tight and solid to battery terminals.
- Locate battery in a ventilated compartment.

©2018 Johnson Outdoors Marine Electronics, Inc.

MOTOR WIRING DIAGRAM

ENDURA

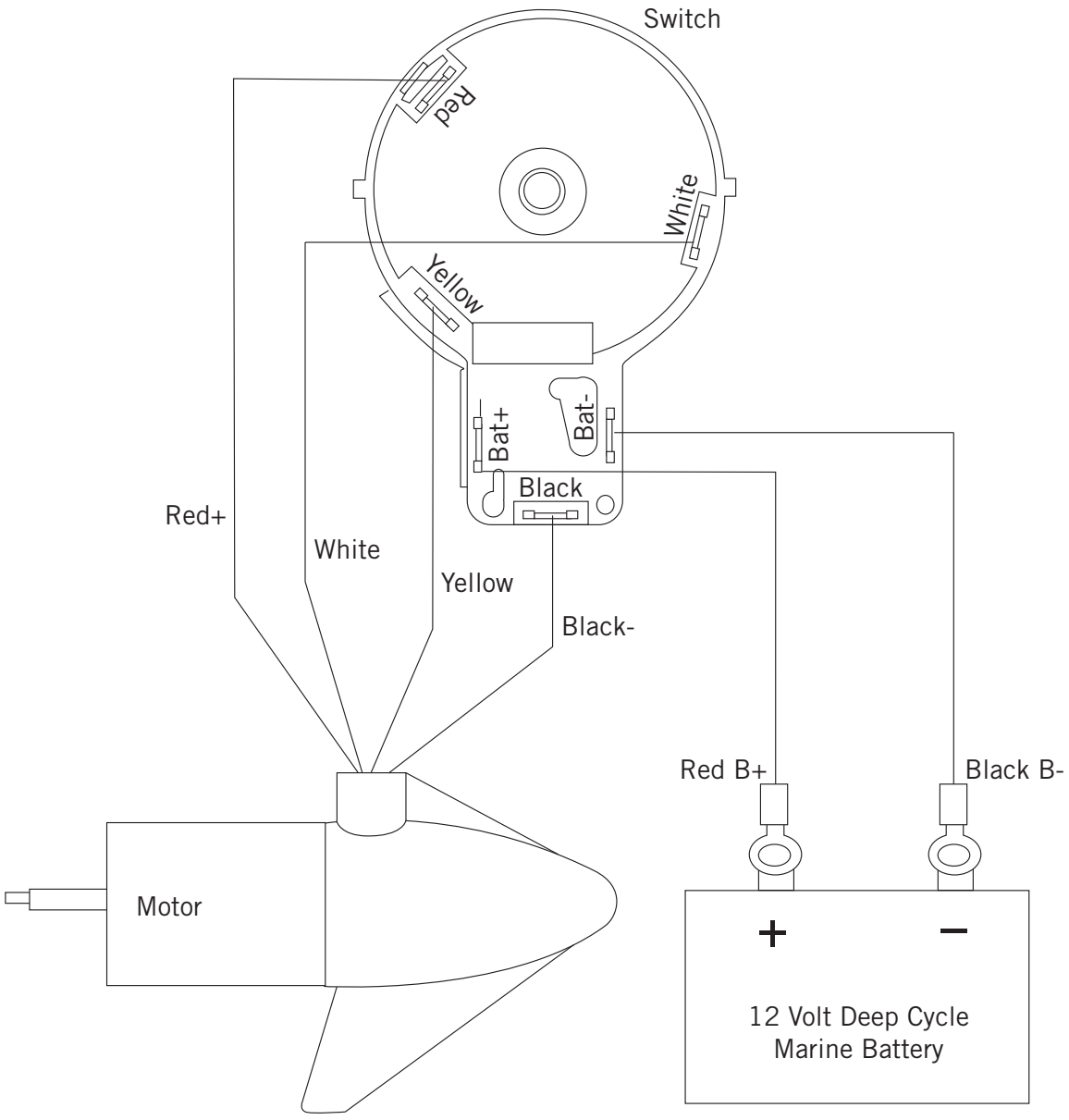

NOTICE: This is a multi-voltage diagram. Double-check your motor's voltage for proper connections. Over-Current Protection Devices are not shown in this illustration.

©2018 Johnson Outdoors Marine Electronics, Inc.

USING & ADJUSTING THE MOTOR

STOWING THE MOTOR

⚠ WARNING

When stowing or deploying the motor, keep fingers clear of all hinge and pivot points and all moving parts. Practice proper ergonomics when stowing and deploying the motor to prevent injury.

⚠ WARNING

Moving the motor creates a variety of pinch points. The motor head will create a pinch point if the Steering Tension Knob is loosened and the motor head slides to the top of the Adjustable Depth Collar. Grasp the Shaft and prevent it from sliding all the way down to prevent the pinch point. When adjusting the Mounting Bracket by engaging the Quick Release Tilt Lever, watch for pinch points on the Lever Lock Mounting Bracket and between the Shaft and Mounting Bracket. Grasp the motor away from the area that may come in contact with another area of the motor to prevent injury. Watch for pinch points on the Tiller when moving the motor or using the telescoping handle.

⚠ WARNING

When the motor is being transported, on water or land, it is important to place the motor completely out of water. The motor should be positioned up close to the Lever Lock Mounting Bracket. Always secure the Steering Tension Knob and slide the Adjustable Depth Collar down to the top of the Steering Tension Knob for added security during transport. This provides a secure stow and holds the motor in place during transportation when it is subject to high levels of shock and vibration. Failure to secure the motor may result in injury or damage to the unit.

1

a. Adjust depth so that the motor is fully raised.

b. Press and hold the Quick Release Tilt Lever.

c. Tilt motor into the boat.

d. For transport, always tilt the motor into the boat such that the motor and prop assembly are completely out of the water and the motor is positioned up close to the Lever Lock Mounting Bracket.

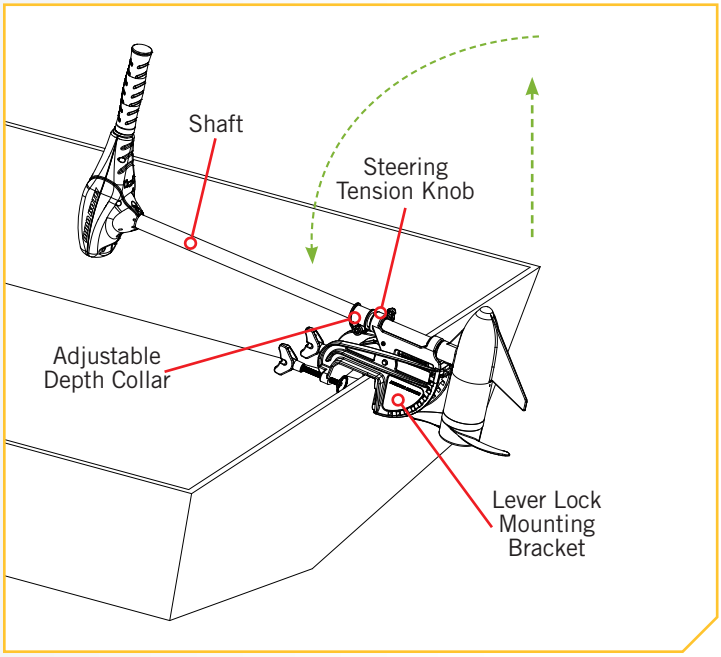

©2018 Johnson Outdoors Marine Electronics, Inc.

ADDITIONAL ADJUSTMENTS

Adjusting the Depth of the Motor

When setting the depth be sure the top of the motor is submerged at least 12” to avoid churning or agitation of surface water. The propeller must be completely submerged.

1

a. Firmly grasp the composite Shaft and hold it steady.

b. Loosen the Steering Tension Knob and the Adjustable Depth Collar until the Shaft slides freely.

c. Raise or lower the motor to the desired depth.

d. Tighten the Adjustable Depth Collar to secure the motor in place.

NOTICE: Be sure the top of the motor is submerged at least 12” below the surface of the water to avoid churning or agitation of surface water.

⚠ WARNING

The motor head will create a pinch point if the Steering Tension Knob is loosened and the motor head slides to the top of the Adjustable Depth Collar. Grasp the Shaft and prevent it from sliding all the way down to prevent the pinch point. Grasp the motor away from the area that may come in contact with another area of the motor to prevent injury.

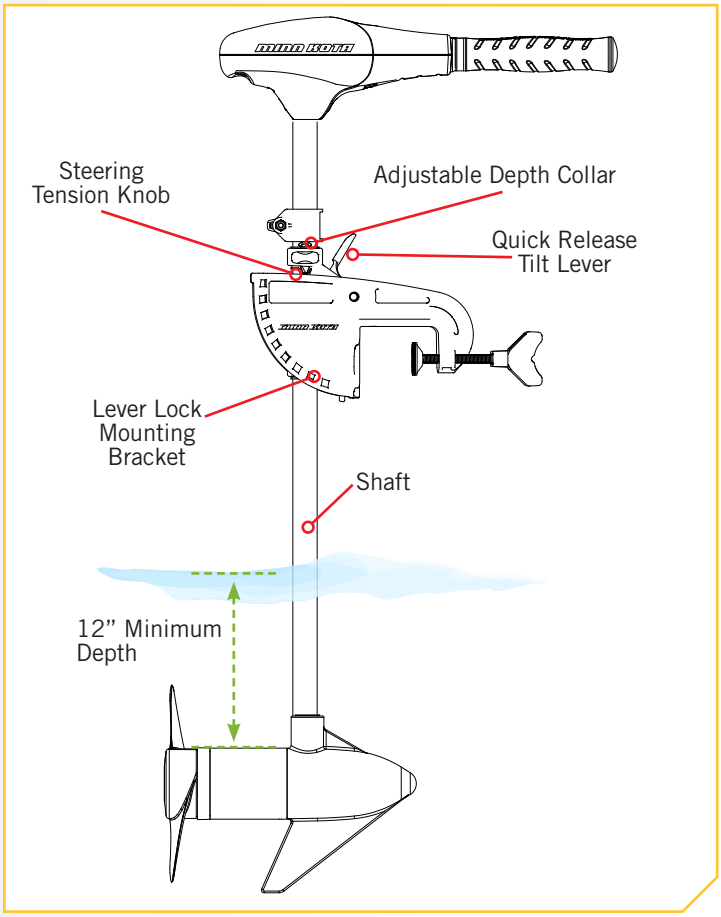

Adjusting the Steering

Adjust the Steering Tension Knob to provide enough tension to allow the motor to turn freely, yet remain in any position without being held or tighten the knob to place the motor in a preset position to leave your hands free for fishing.

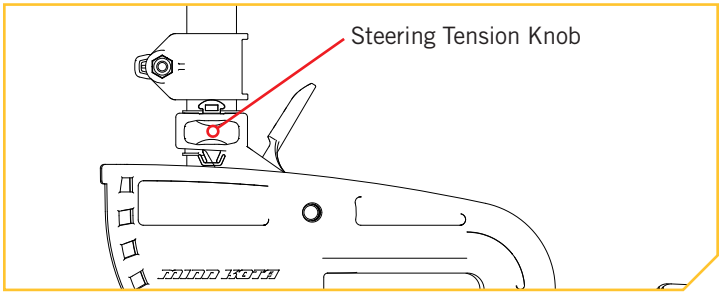

©2018 Johnson Outdoors Marine Electronics, Inc.

Controlling Speed & Direction with the Tiller

These motors are equipped with an extension twist tiller with a telescoping handle, which offers a choice of five forward and three reverse speeds. The speed control may be operated in either direction, forward or reverse. Turn the tiller handle counterclockwise from (OFF) to increase reverse speed and clockwise from (OFF) to increase forward speed. Thrust decreases as you approach (OFF) from either direction.

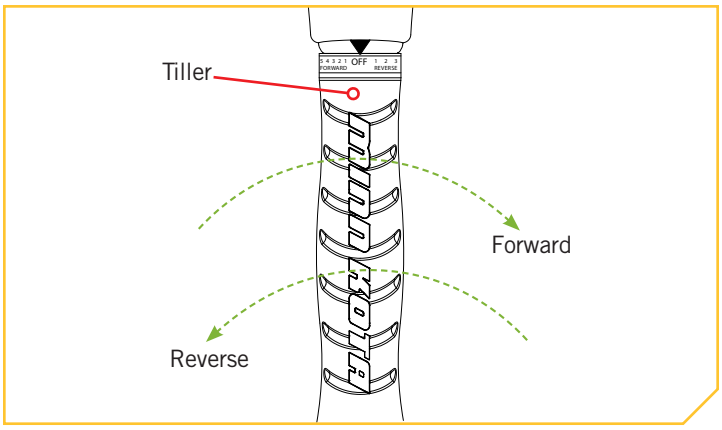

⚠ WARNING

When the motor is not in use, always turn the Tiller handle to "OFF". If the handle is set or accidentally engaged or bummped and is not positioned to "OFF" the prop will turn on unexpectedly. The prop may also turn on unexpectedly if the control board or 5 position switch fails. Prevent injury from a turning propeller and always know how to quickly disengage the power or correct the Tiller to turn the prop off.

⚠ WARNING

The Endura is not intended to be a primary propulsion motor. Heavy use of the motor can cause elevated motor temperatures, which can be increased by an excessively hot operating environment. Use care when handling the control head to avoid burns or injuries from excessive heat. In the event that the motor or speed control would break, always be prepared to take manual control of the boat.

⚠ WARNING

Be alert for unexpected boat movement when operating the Endura. The boat may encounter sharp turns and jolts if the steering is changed sharply or if broad changes in speed are made while operating. Maintain balance and observe safe motor operation.

©2018 Johnson Outdoors Marine Electronics, Inc.

Adjusting the Bracket

You can lock your motor in a vertical position, angle it for shallow water or tilt it completely out of the water.

1

a. Firmly grasp the control head or composite shaft.

b. Press the Quick Release Tilt Lever toward the shaft and hold to release the detent lock or T-bar to adjust the position of the mounting bracket.

c. Tilt to any of the positions on the Lever Lock Mounting Bracket.

d. Release the Quick Release Tilt Lever.

⚠ WARNING

When adjusting the Lever Lock Mounting Bracket by engaging the Quick Release Tilt Lever, watch for pinch points on the Lever Lock Mouniting Bracket and between the Shaft and Mounting Bracket. Grasp the motor away from the area that may come in contact with another area of the motor to prevent injury.

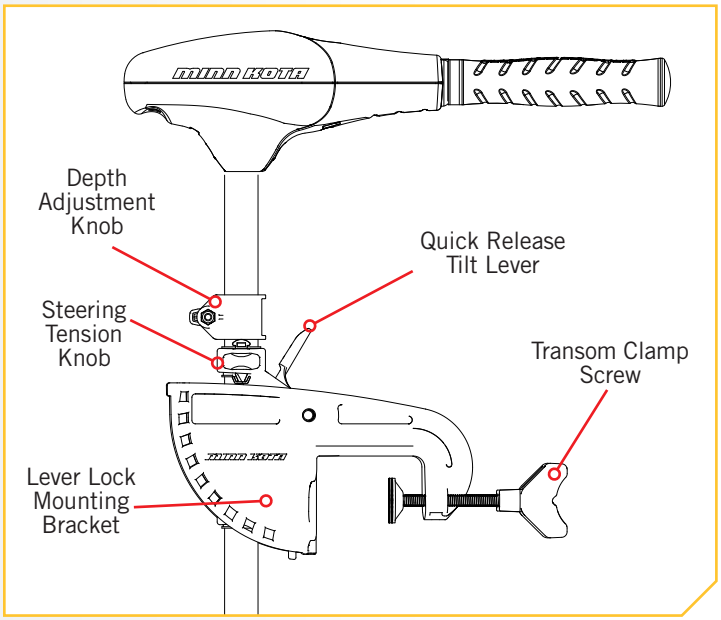

©2018 Johnson Outdoors Marine Electronics, Inc.

SERVICE & MAINTENANCE

PROPELLER REPLACEMENT

TOOLS AND RESOURCES REQUIRED ❯

- 1/2" Open End Wrench
- Flat Blade Screwdriver

INSTALLATION ❯

1

a. Disconnect the motor from all sources of power prior to changing the propeller.

b. Hold the propeller and loosen the Prop Nut with a pliers or a wrench.

c. Remove the Prop Nut and Prop Washer.

NOTICE: If the Drive Pin is sheared or broken, you will need to hold the shaft stationary with a flat blade screwdriver pressed into the slot on the end of the shaft while you loosen the Prop Nut.

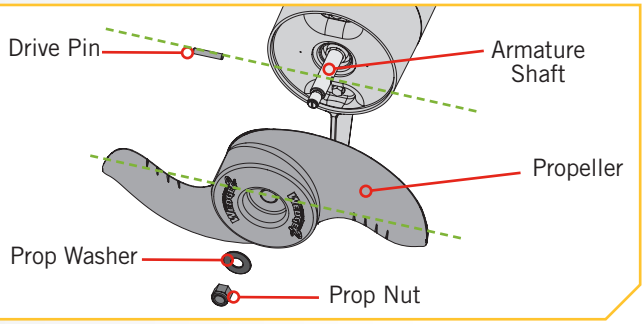

⚠ CAUTION

Disconnect the motor from the battery before beginning any prop work or maintenance.

2

d. Turn the old prop to horizontal and pull it straight off. If drive pin falls out, push it back in.

⚠ CAUTION

If the prop does not readily slide off, take care to not bend the Armature Shaft while removing the prop by pulling the prop evenly off the Armature Shaft.

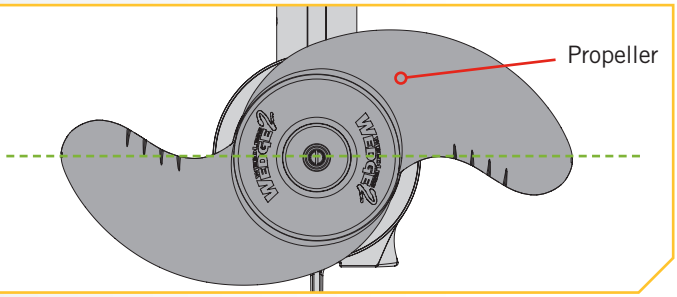

3

e. Align the new Propeller with the Drive Pin.

f. Install the Prop Washer and Prop Nut.

g. Tighten the Prop Nut 1/4 turn past snug at 25-35 inch-lbs.

⚠ CAUTION

Do not over tighten as this can damage the prop.

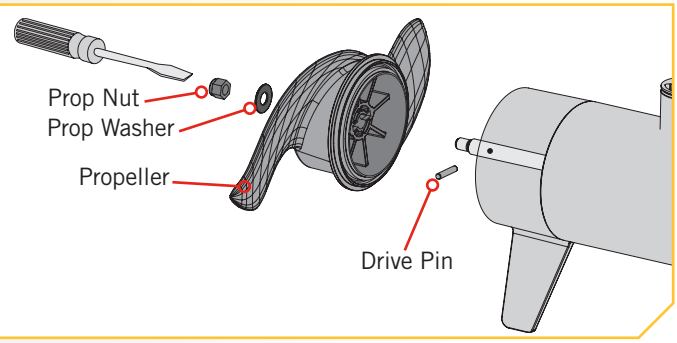

©2018 Johnson Outdoors Marine Electronics, Inc.

GENERAL MAINTENANCE

- After use, the entire motor should be rinsed with freshwater. This series of motors is not equipped for saltwater exposure.
- The composite shaft requires periodic cleaning and lubrication for proper retraction and deployment. A coating of an aqueous based silicone spray will improve operation.
- The propeller must be inspected and cleaned from weeds and fishing line after every use.
  Fishing line and weeds can get behind the prop, damage the seals and allow water to enter the motor.
- Verify the prop nut is secure each time the motor is used.
- To prevent accidental damage during transportation or storage, disconnect the battery whenever the motor is off of the water. For prolonged storage, lightly coat all metal parts with an aqueous based silicone spray.
- For maximum battery life recharge the battery(s) as soon as possible after use. For maximum motor performance restore battery to full charge prior to use.
- Keep battery terminals clean with fine sandpaper or emery cloth.
- The propeller is designed to provide weed free operation with very high efficiency. To maintain this top performance, the leading edge of the blades must be kept smooth. If they are rough or nicked from use, restore to smooth by sanding with fine sandpaper.

TROUBLESHOOTING

1. Motor fails to run or lacks power:
   - Check battery connections for proper polarity.
   - Make sure terminals are clean and corrosion free. Use fine sandpaper or emery cloth to clean terminals.
   - Check battery water level. Add water if needed.
2. Motor loses power after a short running time:
   - Check battery charge. If low, restore to full charge.
3. Motor is difficult to steer:
   - Loosen the steering tension knob on the bracket
   - Lubricate the composite shaft.
4. You experience prop vibration during normal operation:
   - Remove and rotate the prop 180°. See removal instructions in the Propeller Replacement section.
5. Experiencing interference with your fishfinder:
   - You may, in some applications, experience interference in your depth finder display. We recommend that you use a seperate deep cycle marine battery for your trolling motor and that you power the depth finder from the starting/cranking battery. If problems still persist, call our service department at 1-800-227-6433.

NOTICE: For all other malfunctions, visit an Authorized Service Center. You can search for an Authorized Service Center in your area by visiting our Authorized Service page, found on-line at minnkotamotors.com, or by calling our customer service number at 800-227-6433.

©2018 Johnson Outdoors Marine Electronics, Inc.

FOR FURTHER TROUBLESHOOTING AND REPAIR

We offer several options to help you troubleshoot and/or repair your product. Please read through the options listed below.

Buy Parts Online

You can buy parts on-line directly from our website at minnkotamotors.com. Orders confirmed by 12 Noon Central Time, with Overnight Shipping selected, should ship the same business day if the parts are in stock. All other orders should ship within the next 3 business days, depending on the shipment method chosen, and if the parts are in stock.

Frequently Asked Questions

We have FAQs available on our website to help answer all of your Minn Kota questions. Visit minnkotamotors.com and click on "Frequently Asked Questions" to find an answer to your question.

Call Us (for U.S. and Canada)

Our consumer service representatives are available Monday – Friday between 7:00 a.m. – 4:30 p.m. CST at 800-227-6433. If you are calling to order parts, please have the 11-character serial number from your product, specific part numbers, and credit card information available. This will help expedite your call and allow us to provide you with the best consumer service possible. You can reference the parts list located in your manual to identify the specific part numbers.

Email Us

You can email our consumer service department with questions regarding your Minn Kota products. To email your question, visit minnkotamotors.com and click on "Support".

Authorized Service Centers

Minn Kota has over 800 authorized service providers in the United States and Canada where you can purchase parts or get your products repaired. Please visit our Authorized Service Center page on our website to locate a service provider in your area.

Scan to visit Minn Kota service online.

©2018 Johnson Outdoors Marine Electronics, Inc.

COMPLIANCE STATEMENTS

ENVIRONMENTAL COMPLIANCE STATEMENT

It is the intention of JOME to be a responsible corporate citizen, operating in compliance with known and applicable environmental regulations, and a good neighbor in the communities where we make or sell our products.

WEEE DIRECTIVE

EU Directive 2002/96/EC "Waste of Electrical and Electronic Equipment Directive (WEEE)" impacts most distributors, sellers, and manufacturers of consumer electronics in the European Union. The WEEE Directive requires the producer of consumer electronics to take responsibility for the management of waste from their products to achieve environmentally responsible disposal during the product life cycle.

WEEE compliance may not be required in your location for electrical & electronic equipment (EEE), nor may it be required for EEE designed and intended as fixed or temporary installation in transportation vehicles such as automobiles, aircraft, and boats. In some European Union member states, these vehicles are considered outside of the scope of the Directive, and EEE for those applications can be considered excluded from the WEEE Directive requirement.

This symbol (WEEE wheelie bin) on product indicates the product must not be disposed of with other household refuse. It must be disposed of and collected for recycling and recovery of waste EEE. Johnson Outdoors Inc. will mark all EEE products in accordance with the WEEE Directive. It is our goal to comply in the collection, treatment, recovery, and environmentally sound disposal of those products; however, these requirements do vary within European Union member states. For more information about where you should dispose of your waste equipment for recycling and recovery and/or your European Union member state requirements, please contact your dealer or distributor from which your product was purchased.

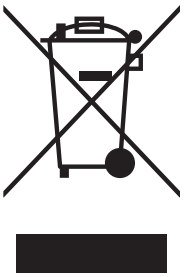

DISPOSAL

Minn Kota motors are not subject to the disposal regulations EAG-VO (electric devices directive) that implements the WEEE directive. Nevertheless never dispose of your Minn Kota motor in a garbage bin but at the proper place of collection of your local town council.

Never dispose of battery in a garbage bin. Comply with the disposal directions of the manufacturer or his representative and dispose of them at the proper place of collection of your local town council.

FCC COMPLIANCE

This device complies with Part 15 of the FCC rules. **Operation is subject to the following two conditions:**

1. This device may not cause harmful interference.
2. This device must accept any interference that may be received, including interference that may cause undesired operation.

Changes or modifications not expressly approved by Johnson Outdoors Marine Electronics, Inc. could void the user's authority to operate this equipment.

©2018 Johnson Outdoors Marine Electronics, Inc.

COMPLIANCE STATEMENTS

NOTICE: This equipment has been tested and found to comply with the limits for a Class B digital device, pursuant to part 15 of the FCC Rules. These limits are designed to provide reasonable protection against harmful interference in a residential installation. This equipment generates, uses and can radiate radio frequency energy and, if not installed and used in accordance with the instructions, may cause harmful interference to radio communications. However, there is no guarantee that interference will not occur in a particular installation. **If this equipment does cause harmful interference to radio or television reception, which can be determined by turning the equipment off and on, the user is encouraged to try to correct the interference by one or more of the following measures:**

- Reorient or relocate the receiving antenna.
- Increase the separation between the equipment and receiver.
- Connect the equipment into an outlet on a circuit different from that to which the receiver is connected.
- Consult the dealer or an experienced radio/TV technician for help.

INDUSTRY CANADA COMPLIANCE

This product meets the applicable Industry Canada technical specifications. Operation is subject to the following two conditions: (1) this device may not cause interference, and (2) this device must accept any interference, including interference that may cause undesired operation of the device.

Changes or modifications not expressly approved by Johnson Outdoors Marine Electronics, Inc. could void the user's authority to operate this equipment.

ENVIRONMENTAL RATINGS

Ambient operating temperature range: -10C to 50C
Ambient operating humidity range: 5% to 95%
Maximum operating altitude: 10,000 feet

©2018 Johnson Outdoors Marine Electronics, Inc.

PARTS DIAGRAM & PARTS LIST

ENDURA 40 - 40 LBS THRUST - 12 VOLT - 36” SHAFT

This page provides Minn Kota® WEEE compliance disassembly instructions. For more information about where you should dispose of your waste equipment for recycling and recovery and/or your European Union member state requirements, please contact your dealer or distributor from which your product was purchased. Tools required, but not limited to: flat head screw driver, Phillips screw driver, socket set, pliers, wire cutters.

Endura 40 Parts Diagram

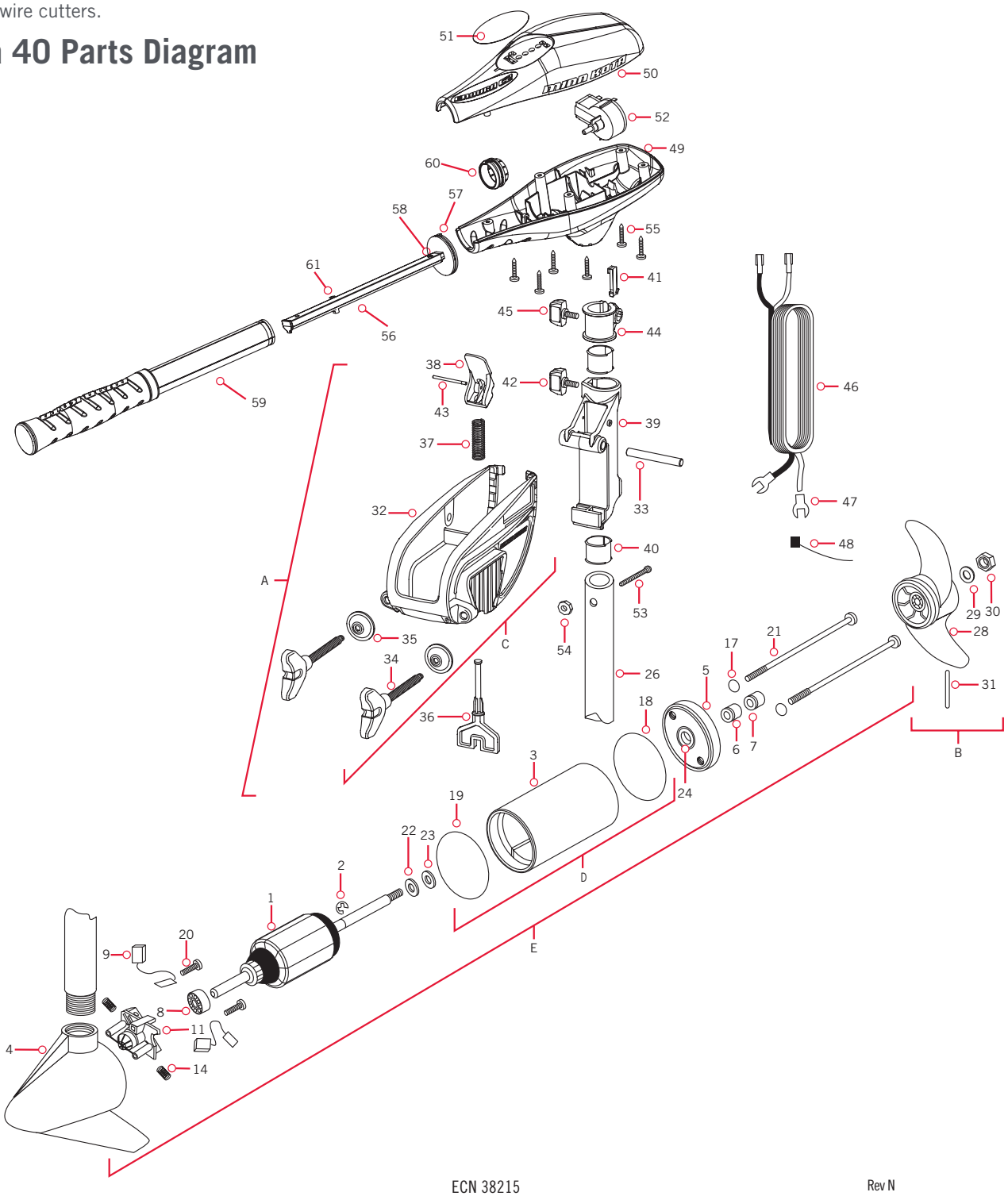

Part #2064971 ECN 38215 Rev N 12/17

©2018 Johnson Outdoors Marine Electronics, Inc.

Endura 40 Parts List

Assembly	Part #	Description	Quantity
A	2771818	BRACKET & HINGE ASSEMBLY (INCLUDES 32-43)	1
B	1378121	PROPELLER KIT (INCLUDES 28-31)	1
C	2771910	BRACKET ASSEMBLY (INCLUDES 32, 34, 35)	1
D	2883460	SEAL AND O-RING KIT	1
E	2069237	MOTOR ASSEMBLY 12 V 3.25 5SP	1

Item	Part #	Description	Quantity
1	2-100-202	ARMATURE ASSEMBLY 12V 3.25	1
2	788-015	RETAINING RING	1
3	2-200-079	HOUSING ASSEMBLY CENTER 3.25 TXT	1
4	2-300-132	BRUSH END HOUSING ASSEMBLY 3.25 SP.CO	1
5	2-400-128	PLAIN END HOUSING ASSEMBLY 3.25	1
6	880-003	SEAL	1
7	880-006	SEAL W/SHIELD	1
8	140-010	BALL BEARING	1
9	188-052	BRUSH ASSEMBLY	2
11	738-030	BRUSH PLATE W/HOLDER 3.25	1
14	975-032	COMPRESSION SPRING	2
17	701-007	O-RING — THRU BOLT	2
18	701-039	O-RING	1
19	701-041	O-RING	1
20	830-001	SCREW — SELF THREAD #8-32X1.7	2
21	830-078	THRU BOLT #8-32X8.0	2
22	990-067	WASHER — STEEL THRUST	1
23	990-070	WASHER — NYLATRON	2
24	144-049	FLANGE BEARING (SERVICE ONLY)	1
26	2032046	36" COMPOSITE TUBE	1
28	2061122	PROPELLER 3.25 HUB DIA	1
29	2151726	WASHER — 5/16 STD SS	1
30	2053101	NUT — PROP NYLOCK (MED) SS	1
31	2092600	DRIVE PIN	1

Item	Part #	Description	Quantity
32	✖	BRACKET	1
33	2060510	HINGE PIN	1
34	✖	SCREW — CLAMP	2
35	✖	WASHER — CLAMP SCREW	2
36	2063605	PLASTIC T-BAR	1
37	2062706	T-BAR SPRING	1
38	2067201	TILT BLACK LEVER	1
39	2061810	PLASTIC HINGE	1
40	2037301	HINGE BUSHING	2
41	2062800	SNAP-IN TENSION BLOCK	1
42	2011385	SCREW — TENSION/KNOB	1
43	2060515	TILT LEVER PIN	1
44	2061520	DEPTH COLLAR	1
45	2011365	SCREW — COLLAR/NEW KNOB	1
46	2050610	LEADWIRE (10 GA) W/SPADE TERM	1
47	2020703	SPADE TERMINAL 14GA HD	2
48	2256300	TIE WRAP	1
49	2062515	CONTROL BOX	1
50	2060215	CONTROL BOX COVER	1
51	2065701	DECAL COVER ENDURA C2 40	1
52	2064028	SWITCH — FWD/REV 5 SP	1
53	2033401	SCREW — #10-24 X 1-3/4	1
54	2013110	NUT — 10-24 HEX	1
55	2012100	SCREW — #8-18 X 5/8	6
56	2990919	INNER HANDLE ASSEMBLY	1
57	2060405	HANDLE PIVOT	1
58	2012104	SCREW — #6 X 1/2" SS	1
59	2990928	OUTER HANDLE ASSEMBLY	1
60	2060009	FRONT BEARING	1
61	2882726	BALL DETENT, RTNR SPRING ASM KIT	1

✖ *This part is included in an assembly and cannot be ordered individually.*

▲ *Not shown on Parts Diagram.*

©2018 Johnson Outdoors Marine Electronics, Inc.

NOTES

©2018 Johnson Outdoors Marine Electronics, Inc.

RECOMMENDED ACCESSORIES

ON-BOARD & PORTABLE BATTERY CHARGERS

Stop buying new batteries and start taking care of the ones you've got. Many chargers can actually damage your battery over time – creating shorter run times and shorter overall life. Digitally controlled Minn Kota chargers are designed to provide the fastest charge that protect and extend battery life.

MK212PC

MK210D

MK110PD

TALON SHALLOW WATER ANCHOR

Introducing the all-new, sleek redesigned Talon. Talon is the only shallow water anchor with up to 15' of anchoring depth, multiple anchoring modes, and control from the bow, transom, console, remote or mobile device.

BUILT-IN WORK LIGHT

Lets you tie lines and work from the transom any time of day — or night. Includes both white and blue LED lights with three brightness settings.

BLUETOOTH® CONNECTIVITY

Lets you control Talon from your mobile device and easily update it. Also opens up communication to other control options.

UP TO 15' DEEP

Control more water and catch more fish with the first 15' shallow water anchor.

MORE CONTROL OPTIONS

- Control Panel
- Wireless Remote
- Mobile App
- Wireless Foot Switch
- Humminbird® Connectivity
- i-Pilot® & i-Pilot Link™ Remote

MINN KOTA ACCESSORIES

We offer a wide variety of trolling motor accessories, including:

- 60-Amp Circuit Breaker
- Mounting Brackets
- Stabilizer Kits
- Extension Handles
- Battery Connectors
- Battery Boxes
- Quick Connect Plugs

MINN KOTA®

minnkotamotors.com

Minn Kota Consumer & Technical Service
Johnson Outdoors Marine Electronics, Inc.
PO Box 8129
Mankato, MN 56001

121 Power Drive
Mankato, MN 56001
Phone (800) 227-6433
Fax (800) 527-4464

JOHNSON OUTDOORS

©2018 Johnson Outdoors Marine Electronics, Inc.
All rights reserved.

Part #2067170 ECN 39044 Rev H 04/18