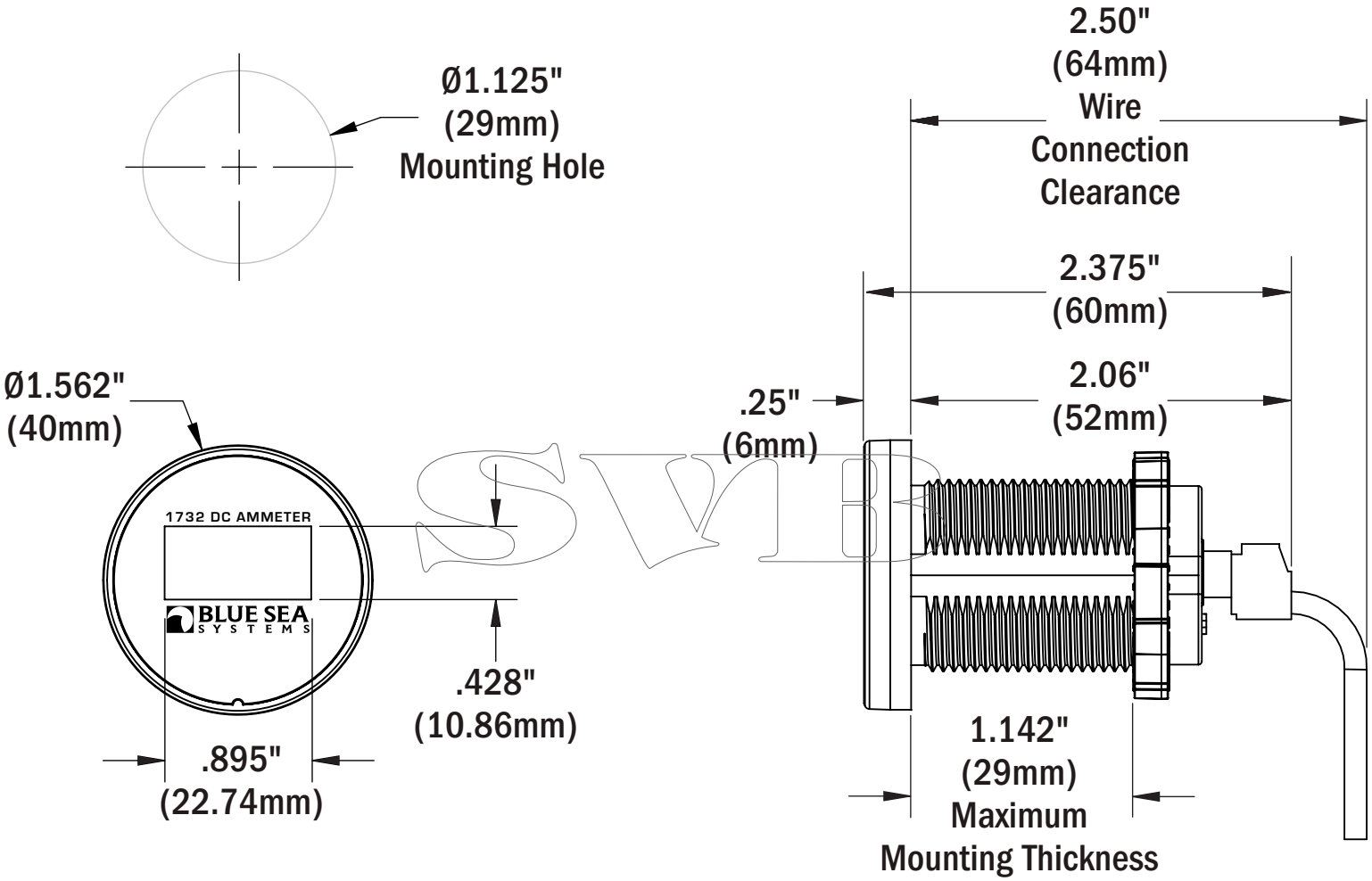

Front/Display View

Side View