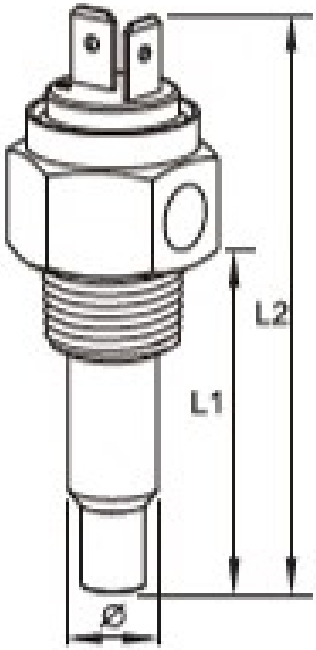
L2
L1
Ø

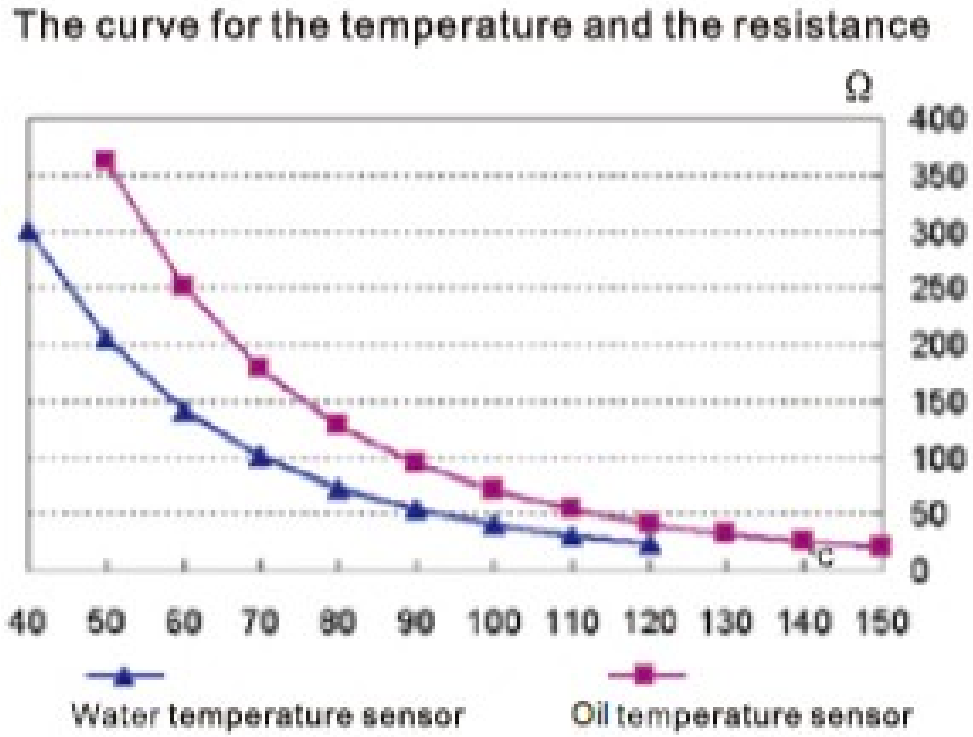
The curve for the temperature and the resistance
Ω
400
350
300
250
200
150
100
50
0
℃
40 50 60 70 80 90 100 110 120 130 140 150
Water temperature sensor
Oil temperature sensor

Water temperature sensor:

℃	40	50	60	70	80	90	95（Alarm）	100	110	120
Ohm	300.8	204.7	141.8	100.6	72.54	53.19	45.81	39.6	29.96	22.94

Oil temperature sensor:

℃	50	60	70	80	90	100	110	20（Alarm）	130	140	150
Ohm	361.8	250.7	177.9	128.2	94.02	70	52.96	40.55	31.44	24.69	19.58

0-5Bar oil pressure sensor

Bar	0	1	2	3	4	5
Ω	10	45	80	115	150	185
Tolerance	±5	±5	±5	±5	±5	±6

0-10Bar oil pressure sensor

Bar	0	1	2	3	4	5	6	7	8	9	10
Ω	10	27.5	45	62.5	80	97.5	115	132.5	150	167.5	185
Tolerance	±5	±5	±5	±5	±5	±5	±5	±5	±5	±7	±8