Raymarine®

REALVISION™ 3D

RV-4xx Stainless Steel Through-Hull Transducer Installation Instructions

English (en-US)
Date: 02-2021
Document number: 87375 (Rev 2)
© 2021 Raymarine UK Limited

Trademark and patents notice

Raymarine, **Tacktick**, **Clear Pulse**, **Truzoom**, **SeaTalk**, **SeaTalk hs**, **SeaTalkng**, and **Micronet**, are registered or claimed trademarks of Raymarine Belgium.

FLIR, **YachtSense**, **DockSense**, **LightHouse**, **DownVision**, **SideVision**, **RealVision**, **HyperVision**, **Dragonfly**, **Element**, **Quantum**, **Axiom**, **Instalert**, **Infrared Everywhere**, **The World's Sixth Sense** and **ClearCruise** are registered or claimed trademarks of FLIR Systems, Inc.

All other trademarks, trade names, or company names referenced herein are used for identification only and are the property of their respective owners.

This product is protected by patents, design patents, patents pending, or design patents pending.

Fair Use Statement

You may print no more than three copies of this manual for your own use. You may not make any further copies or distribute or use the manual in any other way including without limitation exploiting the manual commercially or giving or selling copies to third parties.

Software updates

Check the Raymarine website for the latest software releases for your product.
www.raymarine.com/software

Product documentation

The latest versions of all English and translated documents are available to download in PDF format from the website: www.raymarine.com/manuals.
Please check the website to ensure you have the latest documentation.

Publication copyright

Copyright ©2021 Raymarine UK Ltd. All rights reserved. No parts of this material may be copied, translated, or transmitted (in any medium) without the prior written permission of Raymarine UK Ltd.

English (en-US)
Document number: 87375 (Rev 2)

Contents

Chapter 1 Important information 7

Declaration of Conformity 7
Water ingress 8
Disclaimer 8
Warranty registration 8
Product disposal 8
IMO and SOLAS 8
Technical accuracy 8

Chapter 2 Document and product information 9

2.1 Product documentation 10
LightHouse™ 3 MFD Operation instructions 10
Document illustrations 10
2.2 Applicable products 10
2.3 Product overview 11
2.4 Required additional components 12
Compatible RealVision™ 3D products 12
2.5 Parts supplied — RV-4xx series transducers 13
Additional parts supplied 14

Chapter 3 Installation 15

3.1 Tools required 16
3.2 Pre-installation test 16
Testing the transducer 16
Multiple transducers 17
3.3 Selecting a location 17
Warnings and cautions 17
Location requirements 17
EMC installation guidelines 20
Transducer dimensions — RV-4xx 20
3.4 Transducer mounting 22
Drilling holes in the hull 22
Fitting the anti-rotation bolt 23
Fitting the transducer 24
Anti-fouling 26

Chapter 4 Connections 29

4.1 General cabling guidance 30
Cable types and length 30
Strain relief 30
Cable shielding 30
4.2 Cable routing 30

RealVision™ 3D transducer extension cable 30
4.3 Attaching the connector locking collar 31
4.4 Making connections 34
Chapter 5 System checks and troubleshooting 37
5.1 RealVision™ 3D AHRS calibration 38
5.2 Troubleshooting 38
Operation instructions 39
Sonar troubleshooting 39
Resetting the sonar module 41
Chapter 6 Maintenance 43
6.1 Routine checks 44
6.2 Unit cleaning instructions 44
Transducer cleaning 44
Cleaning preventing bridging 44
6.3 Re-applying anti-fouling paint 45
Chapter 7 Technical support 47
7.1 Raymarine product support and servicing 48
Viewing product information (LightHouse™ 3) 49
7.2 Learning resources 50
Chapter 8 Technical specification 51
8.1 Technical specification 52
Physical specification 52
Environmental specification 52
RealVision™ 3D sonar specification 52
Conformance specification 52
Chapter 9 Spares and accessories 53
9.1 Spares 54
9.2 Accessories 54

Chapter 1: Important information

Warning: Product installation and operation

- This product must be installed and operated in accordance with the instructions provided. Failure to do so could result in personal injury, damage to your vessel and/or poor product performance.
- Raymarine recommends certified installation by a Raymarine approved installer. A certified installation qualifies for enhanced product warranty benefits. Contact your Raymarine dealer for further details, and refer to the separate warranty document packed with your product.

Warning: High voltage

This product contains high voltage. Do NOT remove covers or attempt to access internal components, unless specifically instructed in the documentation provided.

Warning: Positive ground systems

Do not connect this unit to a system which has positive grounding.

Warning: Switch off power supply

Ensure the vessel's power supply is switched OFF before starting to install this product. Do NOT connect or disconnect equipment with the power switched on, unless instructed in this document.

Warning: Transducer operation

Only test and operate the transducer in the water. Do NOT operate out of water as overheating may occur.

Warning: 2 person installation required

To prevent potential product damage, vessel damage and personal injury 2-person installation is recommended.

Warning: Marine-grade sealant

Only use marine-grade neutral cure polyurethane sealants. Do NOT use sealants containing acetate or silicone, which can cause damage to plastic parts.

Caution: Service and maintenance

This product contains no user serviceable components. Please refer all maintenance and repair to authorized Raymarine dealers. Unauthorized repair may affect your warranty.

Declaration of Conformity

FLIR Belgium BVBA declares that the following products are in compliance with the EMC Directive 2014/30/EU:

- **RV-400** Stainless steel thru-hull transducer, part number A80615
- **RV-412P** Stainless steel thru-hull transducer, part number A80616
- **RV-412S** Stainless steel thru-hull transducer, part number A80617
- **RV-420P** Stainless steel thru-hull transducer, part number A80618
- **RV-420S** Stainless steel thru-hull transducer, part number A80619

The original Declaration of Conformity certificate may be viewed on the relevant product page at www.raymarine.com/manuals.

Water ingress

Water ingress disclaimer

The waterproof rating capacity of this product meets the stated Ingress Protection (IP) standard referred to in the product's *Technical Specification*.

Disclaimer

Raymarine does not warrant that this product is error-free or that it is compatible with products manufactured by any person or entity other than Raymarine.

Raymarine is not responsible for damages or injuries caused by your use or inability to use the product, by the interaction of the product with products manufactured by others, or by errors in information utilized by the product supplied by third parties.

Warranty registration

To register your Raymarine product ownership, please visit www.raymarine.com and register online.

It is important that you register your product to receive full warranty benefits. Your unit package includes a bar code label indicating the serial number of the unit. You will need this serial number when registering your product online. You should retain the label for future reference.

Product disposal

Dispose of this product in accordance with the WEEE Directive.

The Waste Electrical and Electronic Equipment (WEEE) Directive requires the recycling of waste electrical and electronic equipment which contains materials, components and substances that may be hazardous and present a risk to human health and the environment when WEEE is not handled correctly.

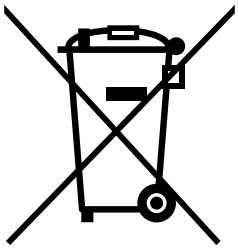

Equipment marked with the crossed-out wheeled bin symbol indicates that the equipment should not be disposed of in unsorted household waste.
Local authorities in many regions have established collection schemes under which residents can dispose of waste electrical and electronic equipment at a recycling center or other collection point.
For more information about suitable collection points for waste electrical and electronic equipment in your region, refer to the Raymarine website: www.raymarine.eu/recycling.

IMO and SOLAS

The equipment described within this document is intended for use on leisure marine boats and workboats NOT covered by International Maritime Organization (IMO) and Safety of Life at Sea (SOLAS) Carriage Regulations.

Technical accuracy

To the best of our knowledge, the information in this document was correct at the time it was produced. However, Raymarine cannot accept liability for any inaccuracies or omissions it may contain. In addition, our policy of continuous product improvement may change specifications without notice. As a result, Raymarine cannot accept liability for any differences between the product and this document. Please check the Raymarine website (www.raymarine.com) to ensure you have the most up-to-date version(s) of the documentation for your product.

Chapter 2: Document and product information

Chapter contents

- 2.1 Product documentation on page 10
- 2.2 Applicable products on page 10
- 2.3 Product overview on page 11
- 2.4 Required additional components on page 12
- 2.5 Parts supplied — RV-4xx series transducers on page 13

2.1 Product documentation

The following documentation is applicable to your product:

All documents are available to download as PDFs from www.raymarine.com/manuals

Documentation

Description	Part number
Installation instructions (this document)	87375
RV-4xx Transducer Mounting template	87376
LightHouse™ 3 Basic Operation instructions. Includes basic operation instructions for the Sonar application on your MFD.	81369
LightHouse™ 3 Advanced Operation instructions. Includes advanced operation instructions for the Sonar application on your MFD.	81370

LightHouse™ 3 MFD Operation instructions

For operation instructions for your product please refer to the LightHouse™ 3 MFD Operation instructions.

The Basic (81369) and Advanced (81370) LightHouse™ 3 Operation Instructions can be downloaded from the Raymarine website: www.raymarine.com/manuals. Please check the website to ensure you have the latest documentation.

Document illustrations

Your product and if applicable, its user interface may differ slightly from that shown in the illustrations in this document, depending on product variant and date of manufacture.

All images are provided for illustration purposes only.

2.2 Applicable products

This document is applicable to the **RV-400**, **RV-412(P/S)**, and **RV-420(P/S)** RealVision™ 3D stainless steel thru-hull transducers.

These transducers are capable of producing 3D sonar images when connected to a **RealVision™ 3D** variant MFD running **LightHouse™ 3** software, or a **LightHouse™ 3** compatible MFD used in conjunction with an RVX1000 **RealVision™ 3D** sonar module. Five transducers are available in the RV-4xx series, each having the same external shape and dimensions.

Important:

- The RV-4xx series transducers are recommended for vessel's with metal hulls., when installing, ensure that the transducer is isolated from the metal hull using ALL of the supplied isolator parts
- Do NOT install stainless steel transducers on vessels with a positive ground system.

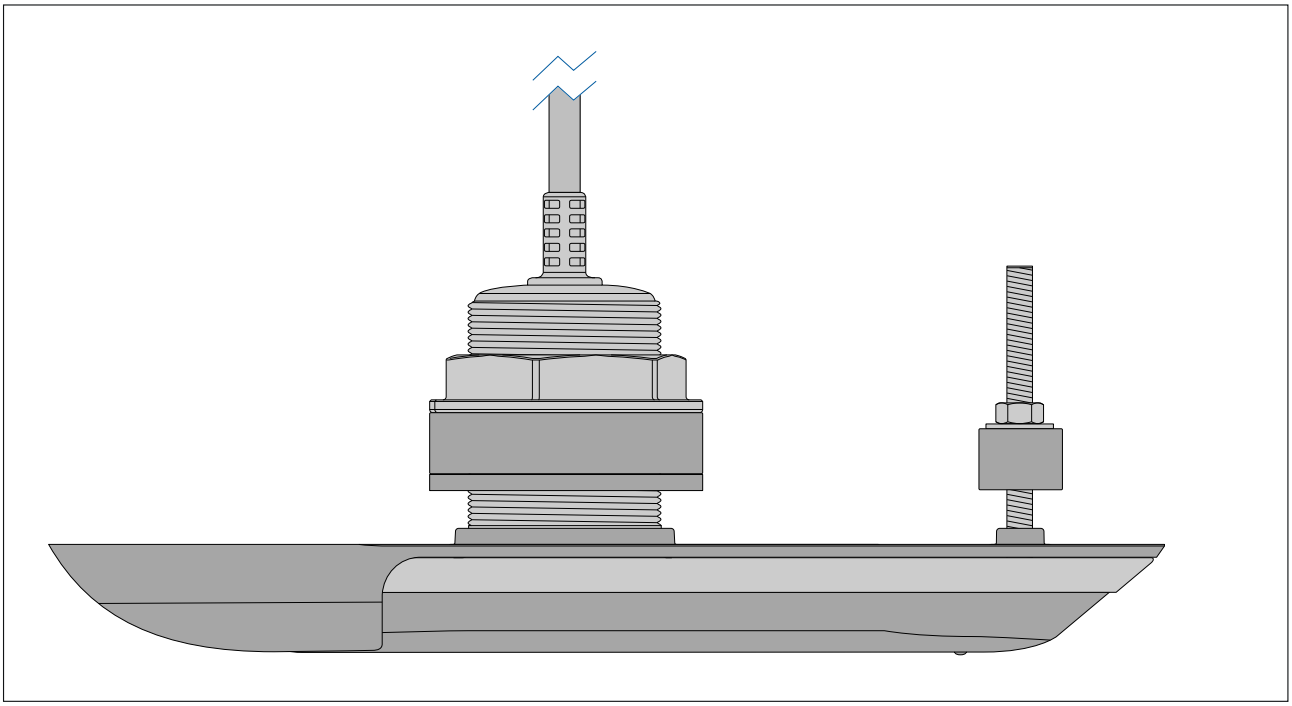

The transducers differ internally, and contain different numbers and types of transmit and receive elements. Your installation should comprise either a single **RV-400** transducer, or a split-pair of **RV-412(P/S)** or **RV-420(P/S)** transducers.

The hull geometry of your vessel determines the most appropriate transducers to use. You should fit transducers whose elements are angled to match within ±6° of your hull's deadrise angle, as detailed below:

- **RV-400** RealVision™ 3D stainless steel 0° (for deadrise 0° to 6°) thru-hull all-in-one transducer (Part number: A80615)
- **RV-412P** and **RV-412S** RealVision™ 3D stainless steel 12° (for deadrise 6° to 18°) thru-hull split-pair transducers (System pack part number: T70450)
  - **RV-412P** port transducer (Part number: A80616)
  - **RV-412S** starboard transducer (Part number: A80617)
- **RV-420P** and **RV-420S** RealVision™ 3D stainless steel 20° (for deadrise 14° to 26°) thru-hull split-pair transducer (System pack part number: T70451)
  - **RV-420P** port transducer (Part number: A80618)
  - **RV-420S** starboard transducer (Part number: A80619)

2.3 Product overview

The RV-4xx series of products are thru-hull mounted RealVision™ 3D sonar transducers, capable of producing realistic 3D representations of the objects below your vessel, to help you identify underwater structures and locate fish.

- Stainless steel construction transducers are recommended for installation on vessels with steel or aluminium hulls.
- Stainless steel construction provides robust and reliable operation.
- 4 sonar channels: DownVision™, SideVision™, CHIRP, and RealVision™ 3D sonar technology combined in a single unit.
- Powerful and practical sonar operating ranges:
  - CHIRP sonar = 0.6 M (2 ft) to 274 m (900 ft)
  - DownVision™ = 0.6 M (2 ft) to 183 m (600 ft)
  - SideVision™ = 0.6 M (2 ft) to 91 m (300 ft)
  - RealVision™ 3D = 0.6 M (2 ft) to 91 m (300 ft)
- Built-in AHRS (Attitude and Heading Reference Sensor) helps to stabilize the sonar imaging, automatically compensating for vessel motion.

- Cables included:
  - RV-400: 8 m (26.2 ft) attached cable.
  - RV-4xx(P/S): 2 m (6.5 ft) attached cable.
  - An 8 m (26.2 ft) extension cable (A80477) and a 'Y' cable (A80478) is provided when ordering transducers as a split-pair.
- Waterproof to IPx6 (surfaces exterior to hull, only), IPx7, IPx8.

2.4 Required additional components

This product forms part of a system of electronics and requires the following additional components for full operation.

- Compatible RealVision™ 3D sonar-capable device. Refer to **Compatible RealVision™ 3D products**, for a list of compatible products.
- For longer cable runs, a transducer extension cable will also be required. Refer to Chapter 9 **Spares and accessories**, for suitable cables.

Compatible RealVision™ 3D products

The transducer must be connected to a RealVision™ 3D sonar-capable device. The following RealVision™ 3D sonar-capable products are compatible with the transducer.

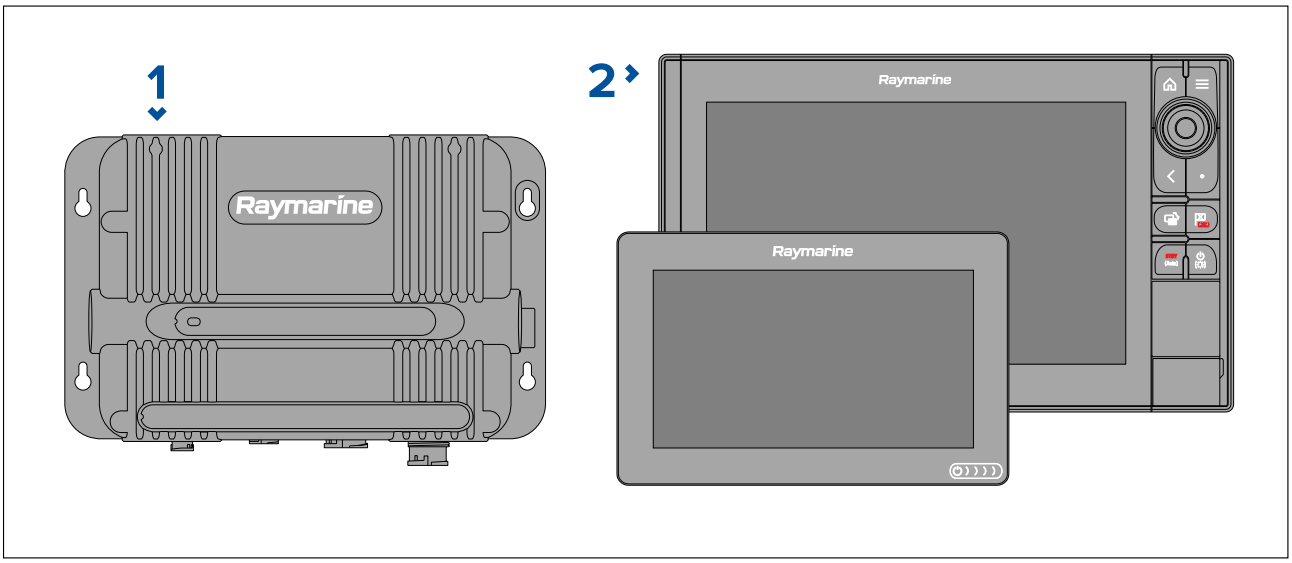

1. RVX1000 external RealVision™ 3D sonar module (a LightHouse™ 3 compatible MFD is also required).
2. LightHouse™ 3 compatible MFD with built in RealVision™ 3D sonar module (i.e.: Axiom, Axiom+ or Axiom Pro MFDs).

2.5 Parts supplied — RV-4xx series transducers

The following parts are supplied with each RV-4xx series transducers.

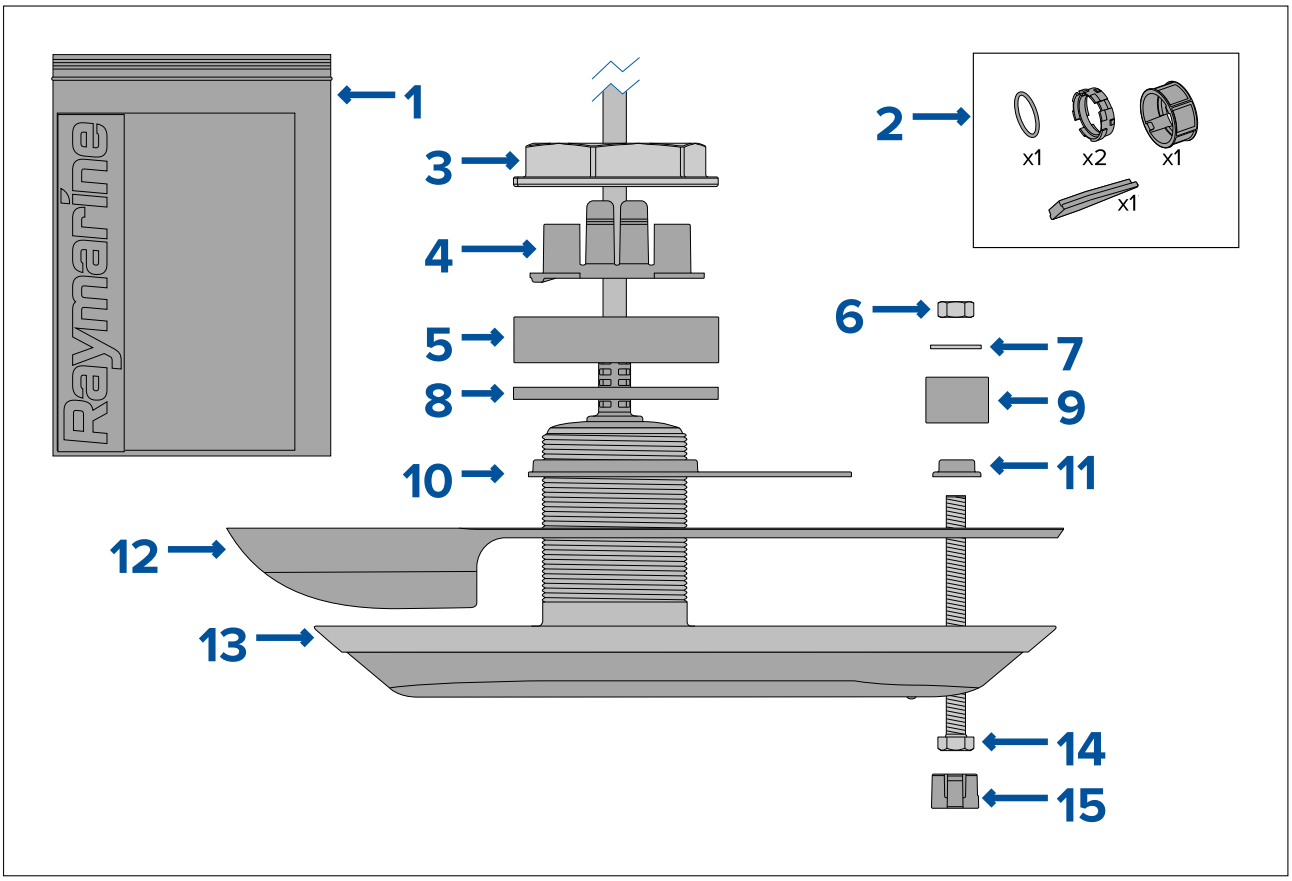

1. Documentation pack
2. Locking collar kit (for transducer cable connector), consisting of:
   - 2 x Split rings (includes spare)
   - 1 x O-ring
   - 1 x Locking collar
   - 1 x Split ring fitting tool
3. Bronze hull nut
4. Cable protector
5. Large internal isolator sleeve
6. Nut for Anti-rotation bolt
7. Small washer for Anti-rotation bolt
8. Rubber washer
9. Small internal isolator sleeve
10. External isolator plate
11. External isolator sleeve
12. Fairing block
13. Transducer (including cable)
14. Anti-rotation bolt
15. Protective cap for Anti-rotation bolt

Transducer cable length

The length of the cable fitted to the transducer is:

- **RV-400** — 8 m (26.2 ft)
- **RV-412(P/S)** and **RV-420(P/S)** — 2 m (6.5 ft)

Additional parts supplied

The following additional cables are supplied when ordering a split pair set of transducers.

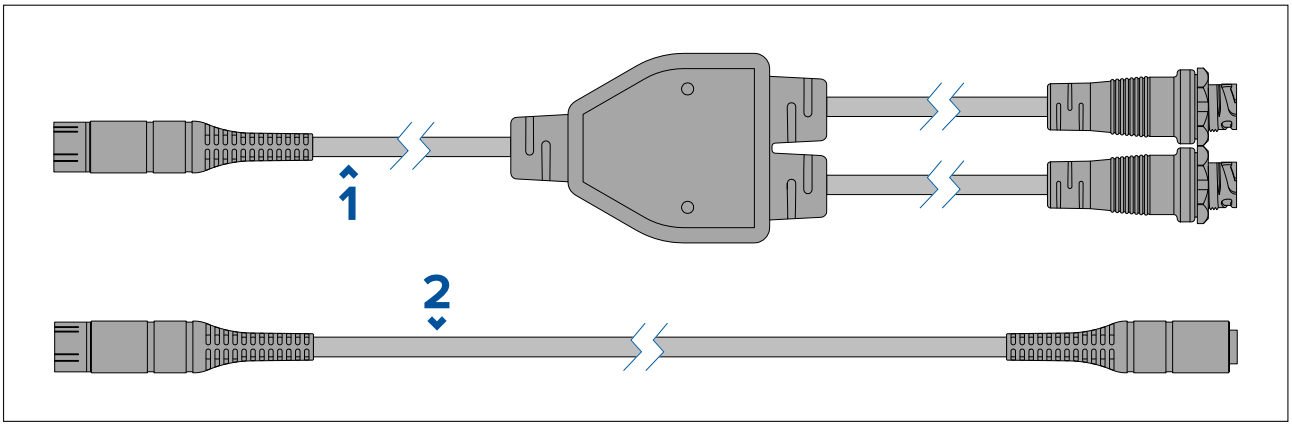

1. “Y-cable” adapter for connecting a split pair of transducers to a RealVision™ 3D-capable sonar device. Cable length: 0.3 m (0.98 ft.)
2. Extension cable 8 m (26.2 ft.). In a split pair transducer configuration, extends the single end of the “Y-cable” adapter.

Chapter 3: Installation

Chapter contents

- 3.1 Tools required on page 16
- 3.2 Pre-installation test on page 16
- 3.3 Selecting a location on page 17
- 3.4 Transducer mounting on page 22

3.1 Tools required

The following tools are required to install any of the transducers listed under “Applicable products”.

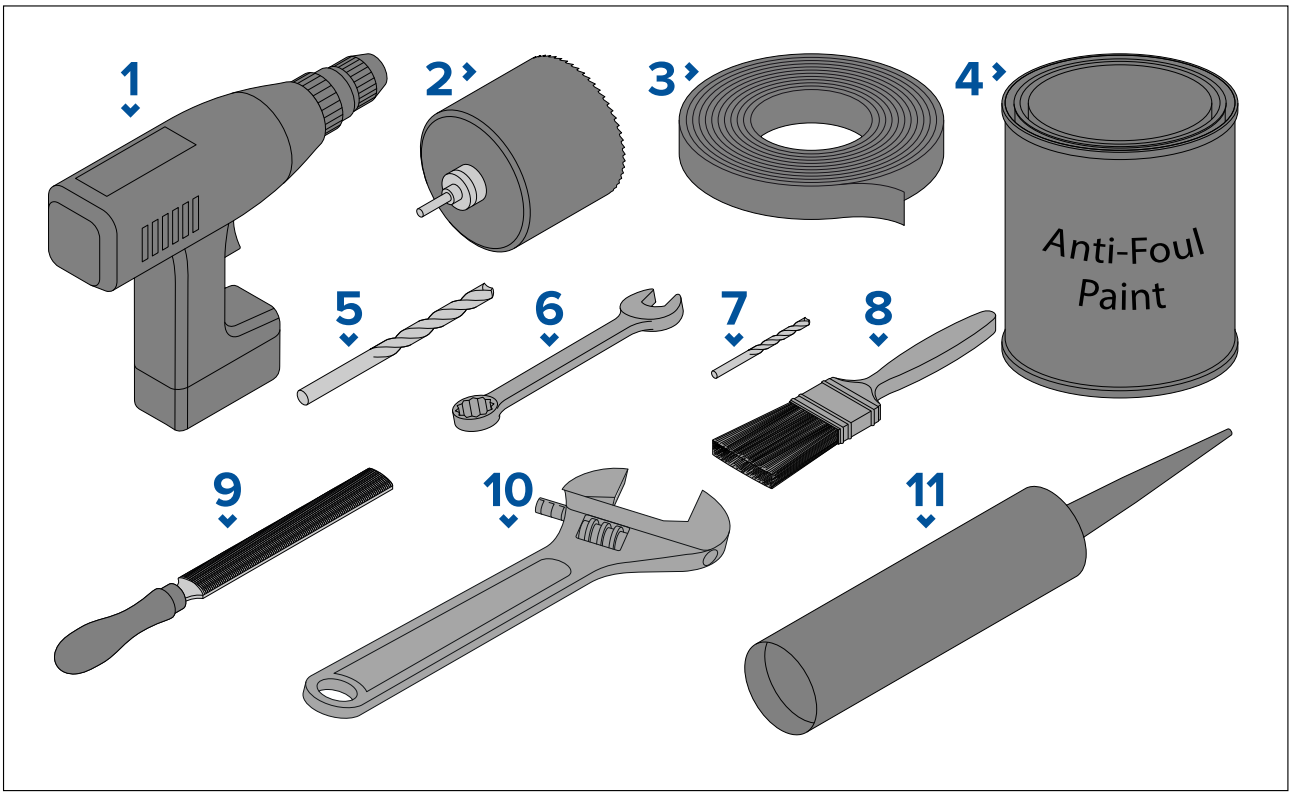

1. Power drill
2. 70 mm (2 3/4 inch) hole cutter(1)
3. Masking / adhesive tape
4. Water based anti-fouling paint
5. 16 mm (5/8 inch) drill bit (for drilling anti-rotation bolt hole)
6. 13 mm (½ inch) wrench (spanner) or suitable size adjustable wrench (spanner)
7. Drill bit (suitable for pilot holes)
8. Paint brush (for application of anti-fouling paint)
9. Half round file
10. 68 mm (2 ¾ inch) wrench (spanner) or suitable size adjustable wrench (spanner)
11. Marine grade sealant (non-acetate based)

Note:

(1) If the specified size hole cutter is not available, use a slightly smaller size hole cutter and then carefully file the hole to the correct size. Alternatively you could use a jigsaw to cut the hole and then carefully file the edge to create a circle the required size.

Warning: Marine-grade sealant

Only use marine-grade neutral cure polyurethane sealants. Do NOT use sealants containing acetate or silicone, which can cause damage to plastic parts.

3.2 Pre-installation test

Testing the transducer

Transducer operation should be checked before installation.

1. Connect the transducer to the transducer connection of a RealVision™ 3D sonar-capable device (e.g. Axiom RV multifunction display).
2. Fully submerge the transducer in water.

3. Power up the RealVision™ 3D sonar-capable device, and / or multifunction display.
4. Open a Fishfinder (Sonar) application on your multifunction display.
5. If required, select the relevant transducer / channel from the Channel selection page (**Menu > Channel**).
6. Check that accurate depth and temperature readings are displayed.
7. If you experience difficulties obtaining readings then contact Raymarine Technical Support.

Warning: Transducer operation

Only test and operate the transducer in the water. Do NOT operate out of water as overheating may occur.

Caution: Transducer cable

- Do NOT use the transducer cable to lift or suspend the transducer; always support the transducer body directly during installation.
- Do NOT cut, shorten, or splice the transducer cable.
- Do NOT remove the connector.

If the cable is cut, it cannot be repaired. Cutting the cable will also void the warranty.

Multiple transducers

Note: If you are installing a split-pair of transducers, ensure that you test both transducers together by connecting them to the RealVision™ 3D sonar-capable device (i.e.: MFD or sonar module) using a Y-cable and extension cable.

Refer to the colored “Port” and “Starboard” labels on the cables to ensure that you connect the transducer cables to the correct Y-cable tails.

3.3 Selecting a location

Warnings and cautions

Important: Before proceeding, ensure that you have read and understood the warnings and cautions provided in the Chapter 1 **Important information** section of this document.

Warning: 2 person installation required

To prevent potential product damage, vessel damage and personal injury 2-person installation is recommended.

Location requirements

Follow the guidelines below when selecting a location for your single transducer or split-pair transducers.

For best performance, transducers should be installed in a location with the least turbulence and aeration.

Important:

Do NOT install transducers in-line with trailer rollers, your vessel’s engine intake or discharge openings.

- Transducers should be installed as close to the center line of the vessel as possible.

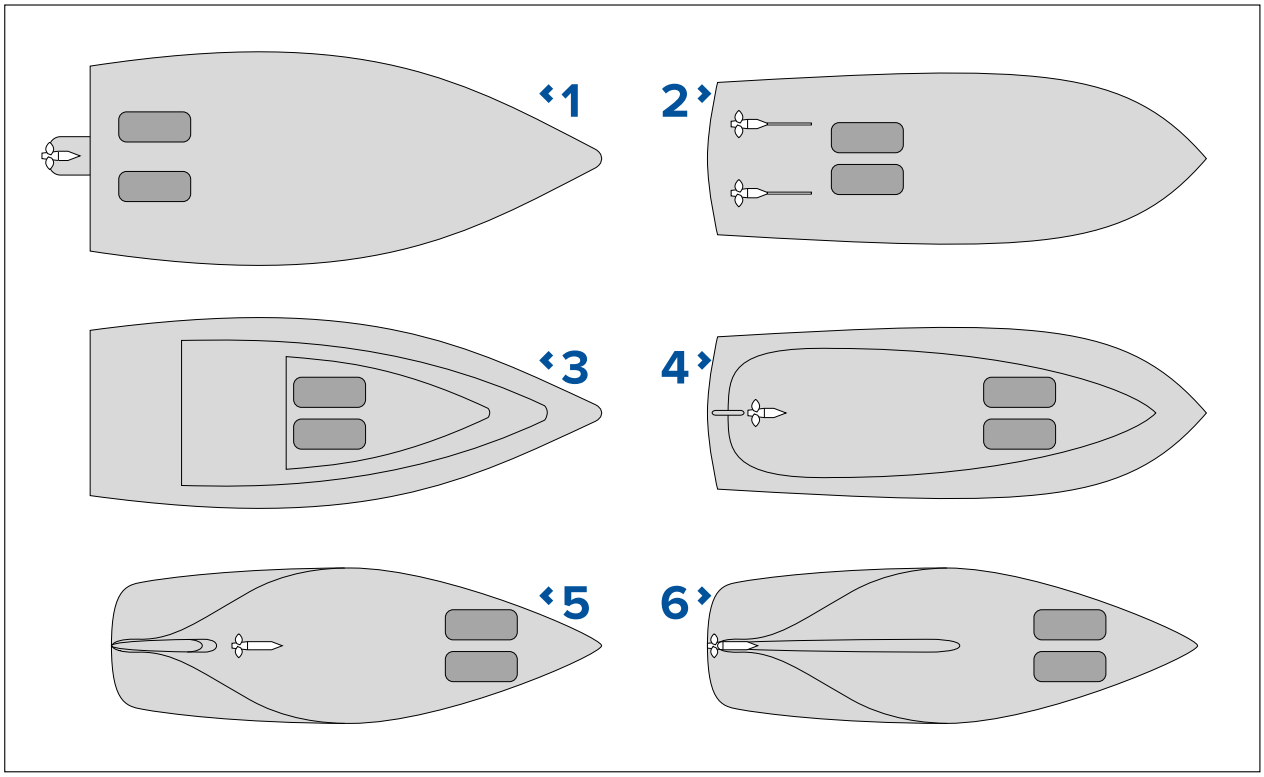

1. **Outboard or I/O (Planing hull)** — mount forward and to the side of the propeller(s).
2. **Inboard (Planing hull)** — mount forward of the propeller(s) and shaft(s).
3. **Stepped hull (Planing hull)** — mount on the first step as far aft as possible.
4. **Displacement hull** — mount approximately 1/3 of the way along the length of the hull, measured along the waterline.
5. **Fin keel (Keel sailboat)** — mount forward of the keel, ensuring that the keel will not obstruct the transducers wide beam width.
6. **Full keel (Keel sailboat)** — mount away from the keel at a location with minimum dead rise, ensuring that the keel will not obstruct the transducers wide beam width.

- The mounting surface should be flat so that transducer sits flush against the hull.
- When installing split-pair transducers with angled elements, you must ensure that the hull's deadrise angle at the chosen mounting location is appropriate for the selected transducers.
- When fitting to a hull with a keel, ensure that the transducer beam will not be obstructed by the keel. If the transducer cannot be fitted fore or aft of the keel then use split pair transducers to overcome the obstruction.

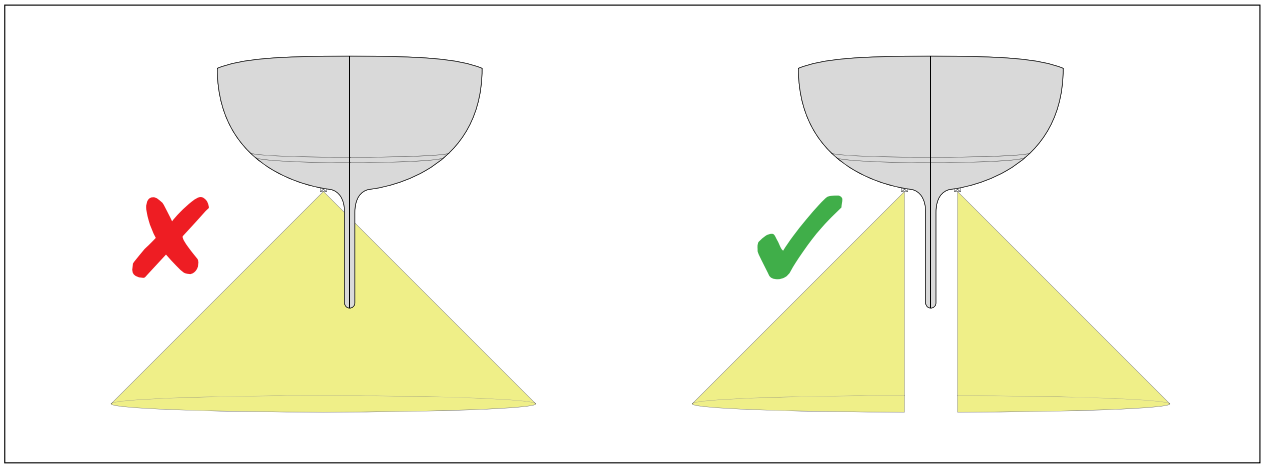

- The transducers should be installed away from any protrusions such as other transducers, steps, ribs, strakes, or rows of rivets.
- Transducers should be installed in a location where no load will be applied to the transducers during, launching, lifting, trailering and storage of the boat.

- Transducers must be installed in the correct orientation, with the anti-rotation bolt closest to the stern of the vessel. Additionally, a direction arrow pointing to the bow is embossed on the anti-rotation bolt cap.
- When installing split-pair transducers:
  - the correct transducer (port or starboard) must be installed in the matching (port or starboard) side of the hull; each transducer in a split pair has a label on the attached cable, and markings and labels on the transducer body to help you identify the transducer:

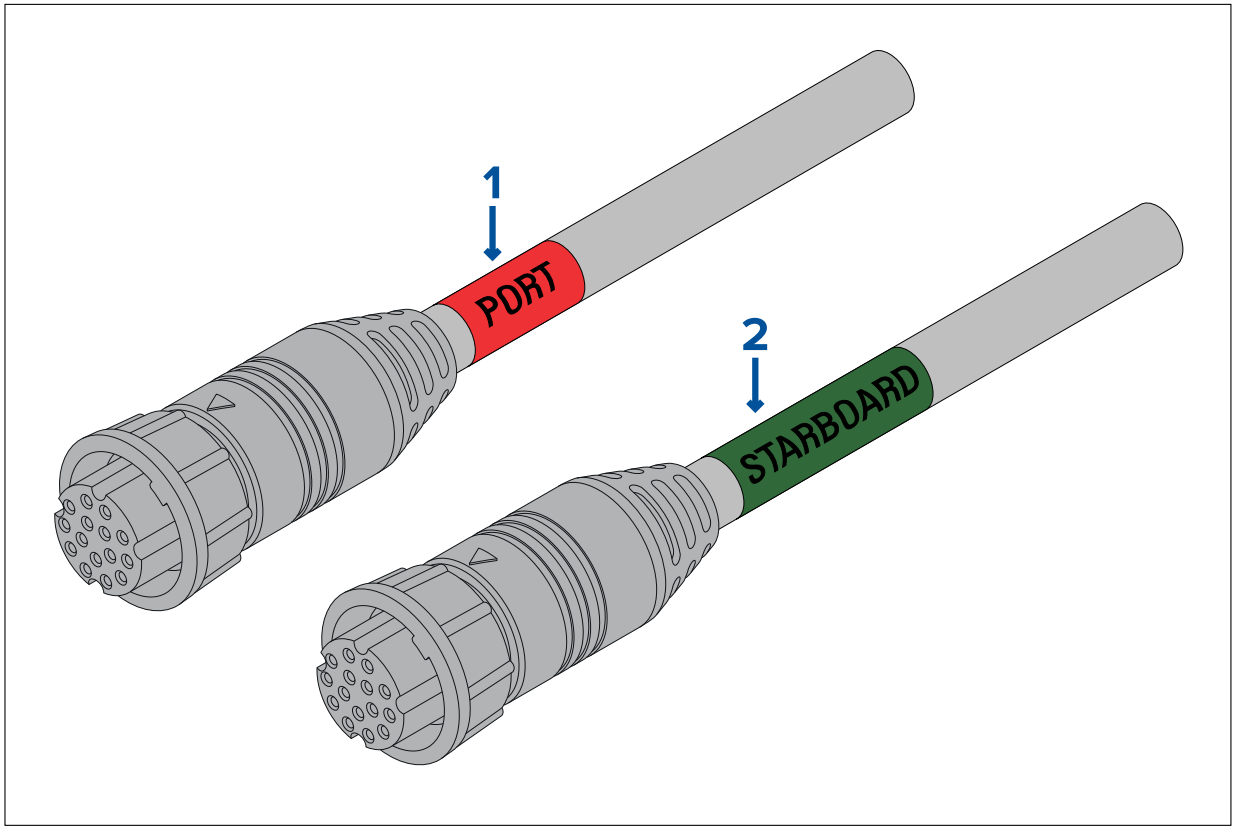

1. **Red** — Port-side split-pair transducer cable
2. **Green** — Starboard-side split-pair transducer cable

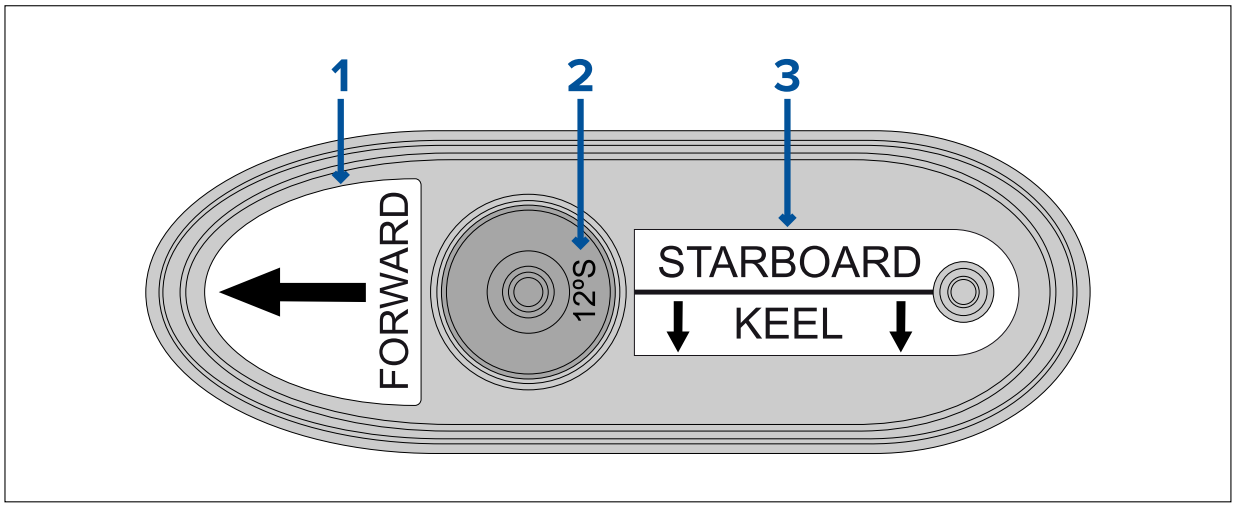

1. Direction to vessel bow
2. Element angle and vessel side:
   - Single (all-in-one) transducers are marked “0°”
   - Split pair (“12°” or “20°”)
   - Split pair — port, “P” or starboard, “S”)
3. Split pair — Vessel side and direction to vessel keel (Single all-in-one transducers do not include this label.)

  - choose mounting positions that are symmetric about the center line of the vessel.

  - choose mounting positions that are at least 300 mm (12 inches) below the water line.
- Transducers should be installed in a location where there is sufficient clearance inside the hull to fit the nut and have at least 100 mm (4 in) of headroom to allow for withdrawal.
- To avoid interference with the internal magnetometer, mount transducers at least 1 m (39 inches) from other electrical devices.

EMC installation guidelines

Raymarine equipment and accessories conform to the appropriate Electromagnetic Compatibility (EMC) regulations, to minimize electromagnetic interference between equipment and minimize the effect such interference could have on the performance of your system

Correct installation is required to ensure that EMC performance is not compromised.

Note: In areas of extreme EMC interference, some slight interference may be noticed on the product. Where this occurs the product and the source of the interference should be separated by a greater distance.

For **optimum** EMC performance we recommend that wherever possible:

- Raymarine equipment and cables connected to it are:
  - At least 1 m (3.3 ft) from any equipment transmitting or cables carrying radio signals e.g. VHF radios, cables and antennas. In the case of SSB radios, the distance should be increased to 2 m (6.6 ft).
  - More than 2 m (6.6 ft) from the path of a radar beam. A radar beam can normally be assumed to spread 20 degrees above and below the radiating element.
- The product is supplied from a separate battery from that used for engine start. This is important to prevent erratic behavior and data loss which can occur if the engine start does not have a separate battery.
- Raymarine specified cables are used.
- Cables are not cut or extended, unless doing so is detailed in the installation manual.

Note:

Where constraints on the installation prevent any of the above recommendations, always ensure the maximum possible separation between different items of electrical equipment, to provide the best conditions for EMC performance throughout the installation.

Transducer dimensions — RV-4xx

All transducers in the RV-4xx series have the same external dimensions.

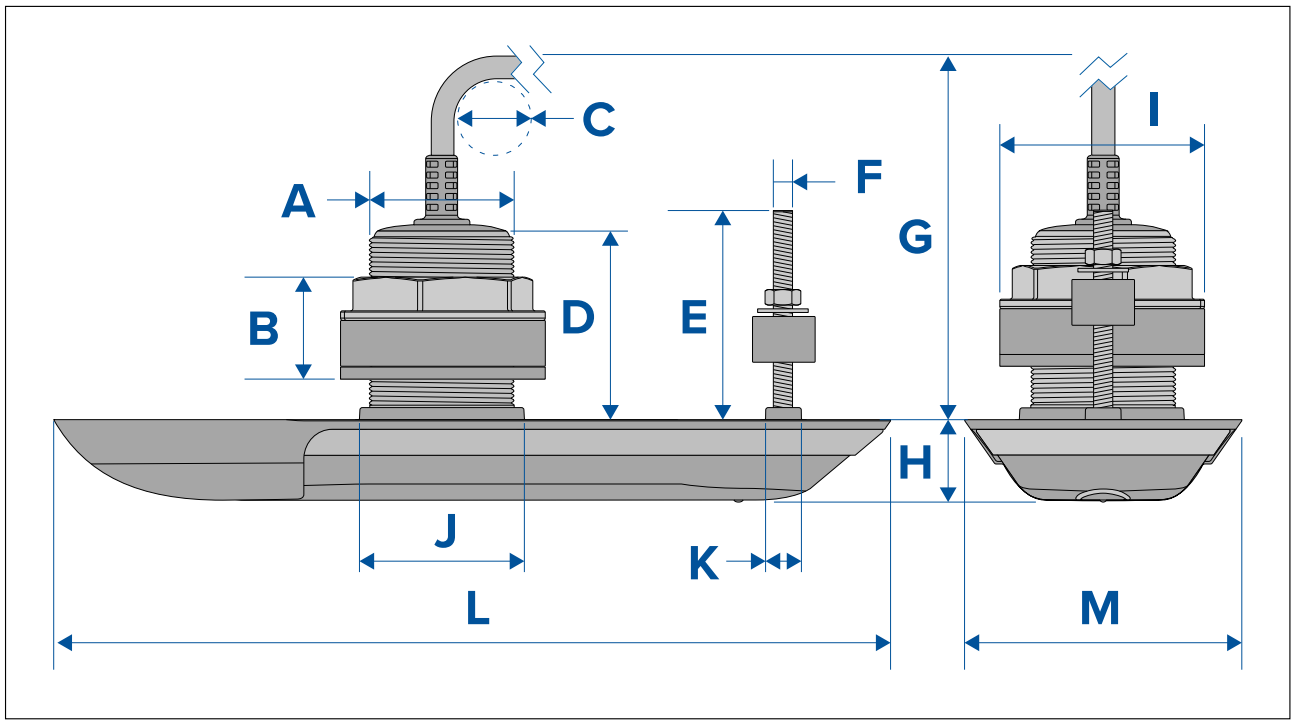

- **A** = 60.00 mm (2.36 in)
- **B** = 42.00 mm (1.65 in)
- **C** = 35.00 mm (1.40 in)
- **D** = 76.00 mm (2.99 in)
- **E** = 87.00 mm (3.43 in)
- **F** = 8.00 mm (0.31 in)
- **G** = 145.00 mm (5.71 in)
- **H** = 35.00 mm (1.4 in)
- **I** = 85.00 mm (3.35 in)
- **J** = 68.00 mm (2.68 in)
- **K** = 14.90 mm (0.59 in)
- **L** = 347.51 mm (13.68 in)
- **M** = 114.00 mm (4.49 in)

Nut sizes

- Hull nut — 68 mm (2 ¾ in) across flats
- Anti-rotation nut — 13 mm (½ in) across flats

RealVision transducer cable connector dimensions

The dimensions of the transducer cable the cable connector are shown below.

Cable connector dimensions

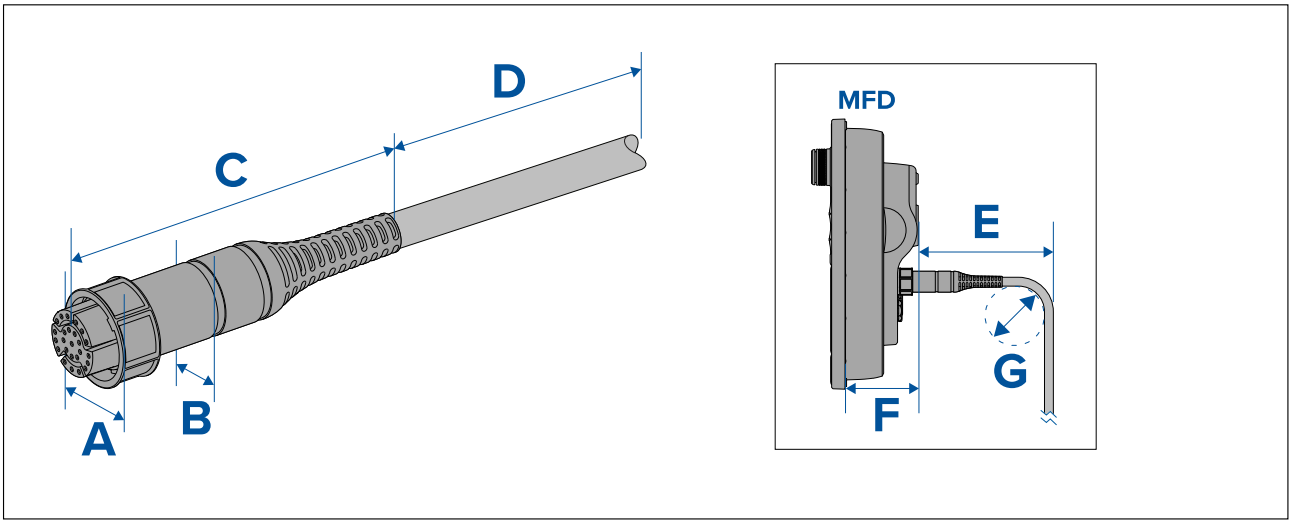

- **A** = 32.00 mm (1.26 in)
- **B** = 25.00 mm (1.00 in)
- **C** = 96.00 mm (3.80 in)
- **D** = Cable length
  - **Single (All-in-one) transducer** attached cable length: 8 m (26.2 ft).
  - **Split pair transducer** attached cable length: 2 m (6.5 ft).
- **E** = 138.6 mm (5.46 in). This dimension is dependent on your MFD variant. Refer to your MFD documentation (Model shown is Axiom Pro 16).
- **F** = 68.4 mm (2.69 in) Maximum. This dimension is dependent on your MFD variant. Refer to your MFD documentation (Model shown is Axiom Pro 16).
- **G** = 35.00 mm (1.40 in)

Note:

For installations where space behind the display is limited, a right-angled transducer cable adaptor is available (A80515). Using the right angled cable adaptor will reduce dimension P above by 20 mm (0.79 in.)

3.4 Transducer mounting

The mounting procedure below should be read thoroughly before attempting to mount the transducer.

Important:

- The RV-4xx series transducers are recommended for vessel's with metal hulls., when installing, ensure that the transducer is isolated from the metal hull using ALL of the supplied isolator parts
- Do NOT install stainless steel transducers on vessels with a positive ground system.

Important:

- Only perform the installation with your vessel out of the water.
- Do NOT lift or suspend the transducer using its cable.
- Ensure that the transducer body is supported during installation.
- Do NOT remove the label attached to the transducer cable; as it helps to ensure correct connection.
- Do NOT overtighten the hull nut or anti-rotation bolt. Overtightening can cause damage to the hull which may result in water leaking into the vessel.

Drilling holes in the hull

To install a Thru-hull transducer you must drill holes in the hull of your vessel for the transducer stem and anti-rotation bolt.

1. Ensure that you are using the correct transducer (i.e.: port / starboard, 0°, 12° or 20° tilted element) for your chosen mounting location.
2. Using self-adhesive tape, attach the supplied mounting template to your chosen mounting location. Ensure that the 'Bow' arrow on the template is pointed towards the vessel's bow and that the template is flat and not creased.
3. Mark the hole centers for the transducer stem and anti-rotation bolt holes on the hull by piercing through the template and using a pencil or marker.
4. Remove the template from the hull.
5. Drill a pilot hole for the transducer stem hole.
6. Drill a 70 mm (2 $^{3}/_{4}$ inch) hole for the transducer stem, using a hole cutter.(1)

Important:

(1) If the specified size hole cutter is not available, use a slightly smaller size hole cutter and then carefully file the hole to the correct size. Alternatively you could use a jigsaw to cut the hole and then carefully file the edge to create a circle the required size.

7. Using a half round file and / or sandpaper, ensure there are no rough edges or burrs around the transducer stem hole.
8. Guide the transducer cable and then the transducer stem up through the transducer stem hole and support from beneath.
9. Ensure that the anti-rotation bolt hole is lined up with the mark you made on the hull and that the transducer is parallel to the centerline of the vessel.

10. Holding the transducer in place, carefully drill the pilot hole for the anti-rotation bolt (using the anti-rotation hole in the transducer as a guide).

Drilling anti-rotation bolt hole

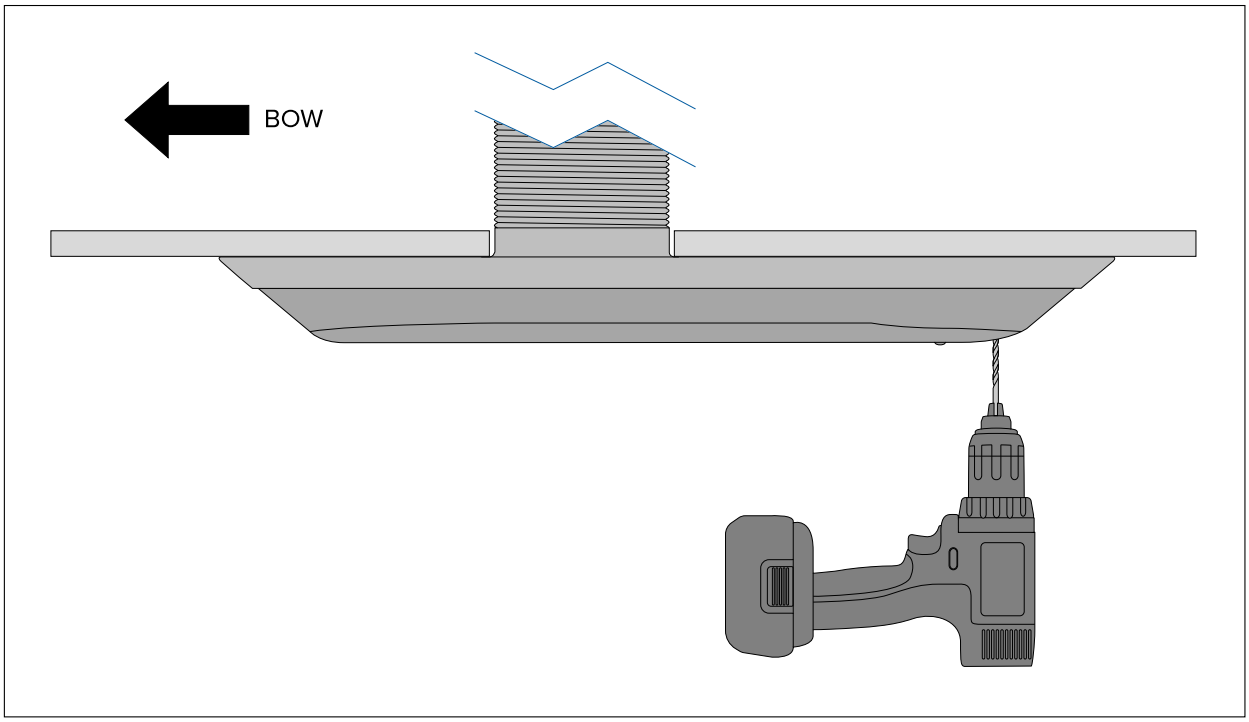

11. Remove the transducer from the hull.
12. Drill a 16 mm ($^5/_8$ inch) hole for the anti-rotation bolt.
13. Check that the anti–rotation bolt fits through the hole.

Fitting the anti-rotation bolt

The anti-rotation bolt and bolt cap should be fitted as detailed below.

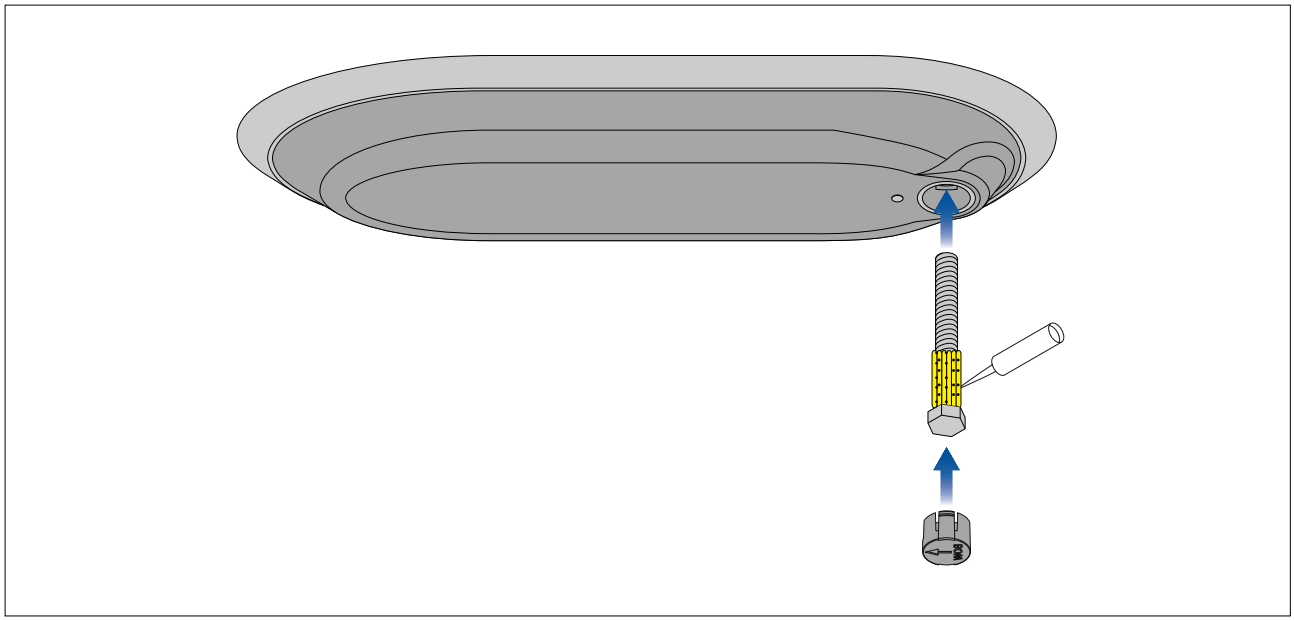

1. Wipe the anti-rotation bolt with an appropriate cloth and cleaning agent (for example: isopropyl alcohol), and ensure the surfaces are dry, clean and free from debris.
2. Apply a thick bead of marine-grade sealant around the stem of the anti-rotation bolt, near the head of the bolt.
3. Guide the anti-rotation bolt through the hole in the transducer ensuring that the bolt head is properly seated.

   The anti-rotation bolt hole includes a captive nut cutout to prevent the bolt from turning during tightening.

4. Apply a small amount of marine grade sealant to the inside of the anti-rotation bolt cap.
5. Fit the anti-rotation bolt cap by pressing it firmly into the hole in the transducer.

   The embossed "BOW" arrow must be pointing towards the temperature sensor in the base of the transducer.

Fitting the transducer

Follow the steps below to fit the transducer to your hull.

Note:

Ensure that a generous amount of marine-grade sealant is used on all mating parts and that the parts are clean and dry before installation to ensure a long lasting watertight seal is achieved.

Mounting and sealant application

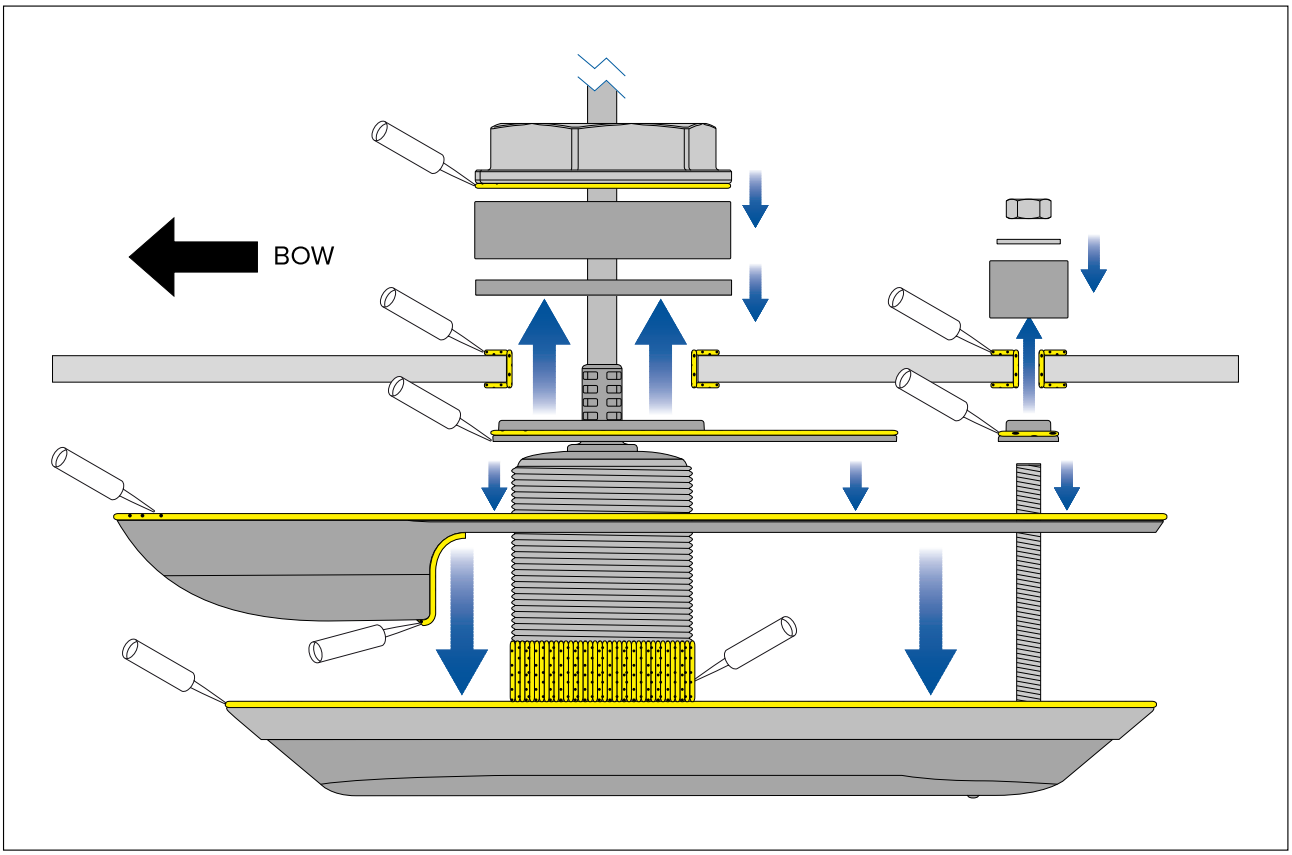

1. Carefully remove all labels from the top face of the transducer.
2. Remove the labels from the top face of the transducer including any residual label glue.
3. Using an appropriate cloth and cleaning agent (for example: isopropyl alcohol), wipe clean ALL surfaces of the supplied components and the mounting location, both outside and inside the hull ensuring that they are free from grease, debris.
4. Apply a thick bead of marine-grade sealant all over the top face of the transducer so that it is completely covered.
5. Feed the transducer cable through the stem hole in the High speed nose cone, positioning the High speed nose cone over the transducer and slide the transducer into the nose.
6. Apply pressure to High speed nose cone to compress the sealant against the transducer.
7. Feed the transducer cable through the stem hole in the external isolator plate, position the external isolator plate in the recess in the top of the High speed nose cone.
8. Feed the external isolator sleeve over the anti-rotation bolt, positioning the external isolator sleeve in the anti-rotation hole recess in the top of the High speed nose cone.
9. Apply a thick bead of marine-grade sealant:
   i. all over the top face of the High speed nose cone, external isolator plate and external isolator sleeve so that they are completely covered.
   ii. all around the bottom part of the threaded section of the transducer stem and the protruding anti-rotation bolt, ensuring that the sealant will protrude approximately 6 mm above the final tightened nuts.

iii. all around and inside the transducer stem and anti-rotation holes on the exterior of the hull.

10. Guide the transducer cable through the stem hole in the hull.
11. Guide the transducer stem and anti-rotation bolt up through the holes in the vessel's hull and support from beneath.
12. From inside the vessel, apply a continuous, thick bead of marine-grade sealant all around the base of the protruding transducer stem and anti-rotation bolt threads.
13. Guide the rubber washer down the transducer cable, and over the threaded section of the transducer stem, ensuring that the rubber washer sits flush on the hull.
14. If necessary, apply additional marine-grade sealant to the transducer stem, above the rubber washer.
15. With the top face pointing upwards, guide the large isolator bush down the transducer cable and over the transducer stem, ensuring it sits flush on the rubber washer.

Large isolator bush top face

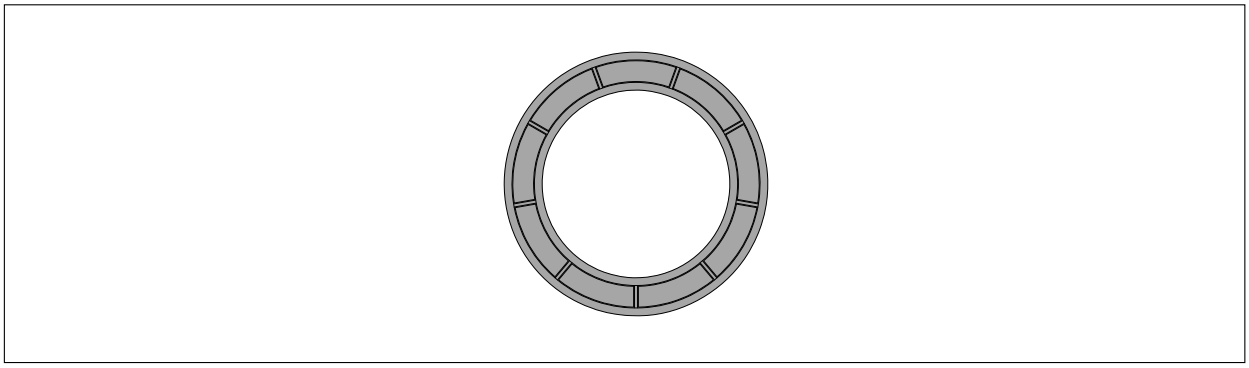

16. If necessary, apply additional marine-grade sealant to the transducer stem, above the large isolator bush.
17. Ensuring the cable protector is fitted to the hull nut, guide the nut down the transducer cable, resting the nut on top of the transducer stem.

Cable protector fitting and removal

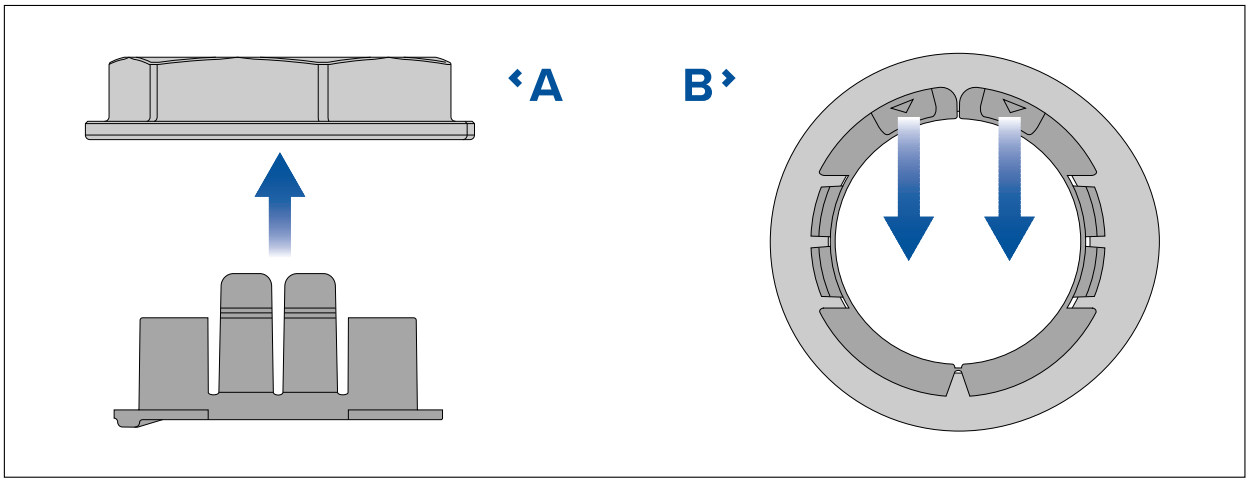

- ***A*** — *Fitting*
- ***B*** — *Removal*

18. Remove the cable protector by pulling the 2 tabs away from the back of the hull nut.
19. Apply a thick bead of marine grade sealant to the bottom face of the hull nut.
20. Screw the hull nut onto the transducer stem and fully tighten, using a suitable sized wrench (spanner).

    Ensure that the hull nut is adequately tightened. You should see the sealant protruding from the edges of all applied surfaces.

21. Place the small internal isolator sleeve over the anti-rotation bolt, ensuring it sits flush on the interior of the hull.

22. If necessary, apply additional marine-grade sealant to the anti-rotation bolt, above the small internal isolator sleeve.
23. Place the small washer over the anti-rotation bolt.
24. If necessary, apply additional marine-grade sealant to the anti-rotation bolt above the small washer.
25. Screw the anti-rotation nut onto the bolt and fully tighten, using a suitable sized wrench (spanner).
26. Apply a thick bead of marine grade sealant in the gap between the transducer and High speed nose cone on the bottom and both sides, as shown below.

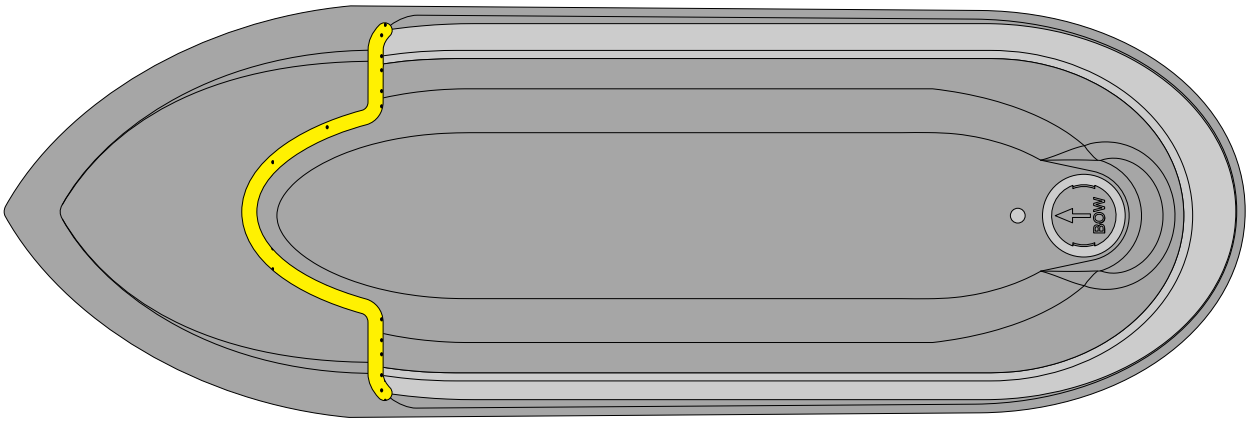

27. Remove any excess sealant on the outside of the hull and transducer, ensuring a smooth transition between High speed nose cone and transducer and transducer and hull.
28. Ensure that the marine-grade sealant has fully cured

    Refer to the sealant manufacturer's instructions for curing times.

29. Unless local environmental regulations prohibit, apply a water based anti-fouling paint to the bottom face of the transducer, ensuring all of the externally exposed transducer surfaces are coated and the paint overlaps onto the hull.
30. Check for leaks around the transducer immediately upon putting the vessel back in the water.

Important:

Do NOT leave your vessel in the water unchecked after installing your transducer. Very small leaks may not be immediately obvious, and considerable bilge water could accumulate over the course of a day, or overnight.

31. Check for leaks at regular intervals after installation until you are satisfied that there are no leaks.
32. Ensure checking for leaks around the transducer is added to your routine vessel maintenance schedule.

Anti-fouling

Where local regulations allow, it is recommended that you coat your transducer using a water-based anti-fouling paint. This will help prevent the build-up of organic growth, which can reduce transducer performance.

Important:

- Before applying water-based anti-fouling paint, check that local environmental rules and regulations do not prohibit the use of anti-fouling paint.
- Never use copper-based anti-fouling paint as this can impact transducer performance.
- Never use ketone-based anti-fouling paint as this can attack the transducer's plastic, damaging the transducer.
- Paint your transducer using a brush, do not use a spray can or a sponge roller as these methods can cause tiny air bubbles to be incorporated in the paint, which will also reduce transducer performance.

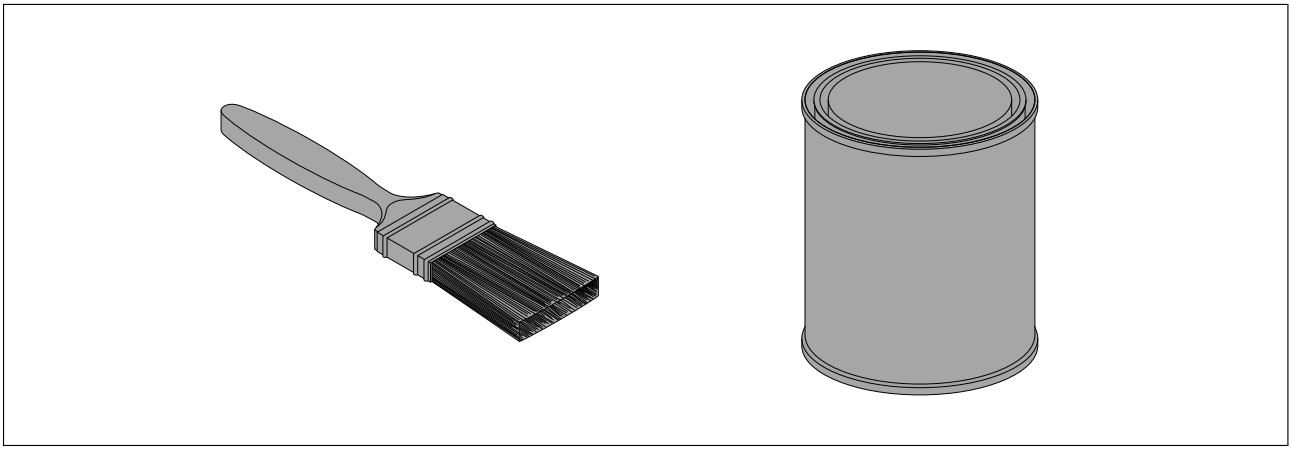

The anti-fouling paint should be applied in a thin and even coat covering all externally exposed transducer surfaces.

You should clean your transducer regularly and re-apply anti-fouling paint every 6 months, or sooner depending on how rapidly organic growth builds up.

For guidance on transducer cleaning refer to **p.44 — Transducer cleaning**

For instructions on re-applying anti-fouling paint refer to **p.45 — Re-applying anti-fouling paint**

Chapter 4: Connections

Chapter contents

- 4.1 General cabling guidance on page 30
- 4.2 Cable routing on page 30
- 4.3 Attaching the connector locking collar on page 31
- 4.4 Making connections on page 34

4.1 General cabling guidance

Cable types and length

It is important to use cables of the appropriate type and length.

- Unless otherwise stated only use cables supplied by Raymarine.
- Where it is necessary to use non-Raymarine cables, ensure that they are of correct quality and gauge for their intended purpose. (e.g.: longer power cable runs may require larger wire gauges to minimize voltage drop along the run).

Strain relief

Use adequate strain relief for cabling to ensure that connectors are protected from strain and will not pull out under extreme sea conditions.

Cable shielding

Ensure that cable shielding is not damaged during installation and that all cables are properly shielded.

Caution: Transducer cable

- Do NOT use the transducer cable to lift or suspend the transducer; always support the transducer body directly during installation.
- Do NOT cut, shorten, or splice the transducer cable.
- Do NOT remove the connector.

If the cable is cut, it cannot be repaired. Cutting the cable will also void the warranty.

4.2 Cable routing

Cable routing requirements for the transducer cable.

Important: To avoid interference, the cable must be routed as far away from VHF radio antenna cables as possible.

Important: The transducer cable's connector is supplied with a separate locking collar assembly, used to secure the cable firmly to a RealVision™ 3D sonar-capable device (e.g. Axiom RV multifunction display). Ensure that you route the cable all the way to the 3D sonar-capable device **before** attaching the locking collar.

- Check that the cable is long enough to reach the equipment it will be connected to. If you are installing split-pair transducers, you must use a Y-cable (A80478) along with an extension cable to connect the transducers to your RealVision™ 3D sonar-capable device (e.g. Axiom RV multifunction display).
- Use grommets in any pass-through holes to prevent damage to the transducer cable.
- Secure the cable at regular intervals using cable clips (not supplied).
- Take care not to apply excessive strain to the cable where it leaves the transducer. Where possible, allow the cable to lay naturally as it leaves the transducer, before securing it with cable clips.
- Do not bend the transducer cable beyond its minimum bend radius. This is particularly important at the point where the cable leaves the transducer.
- Any excess cable should be coiled up at a convenient location.

RealVision™ 3D transducer extension cable

For best performance, cable runs should be kept to a minimum. However, for some installations (including all split-pair transducer installations) it may be necessary to extend the transducer cable.

The following optional extension cables are available:

- RealVision™ transducer extension cable 3 m (9.8 ft) (part number A80475)

- RealVision™ transducer extension cable 5 m (16.4 ft) (part number A80476)
- RealVision™ transducer extension cable 8 m (26.2 ft) (part number A80477)

It is recommended that a maximum of two cable extensions are used, with the total cable length (including the transducer's fitted cable) not exceeding 24 m (78.7 ft).

4.3 Attaching the connector locking collar

The supplied cable is provided with a separate locking collar assembly, ensuring that the cable connection is secure.

This procedure describes how to attach the locking collar to the cable connector. The locking collar parts are supplied in a separate bag, in the package with your product.

Important: Ensure that you route the cable all the way to its destination **before** attaching the locking collar.

1. Slide the locking collar over the end of the connector, then push it towards the cable-end of the connector.

Important: Ensure that the lugs on the locking collar (labelled 'A' in the illustration), are closest to the plug-end of the connector.

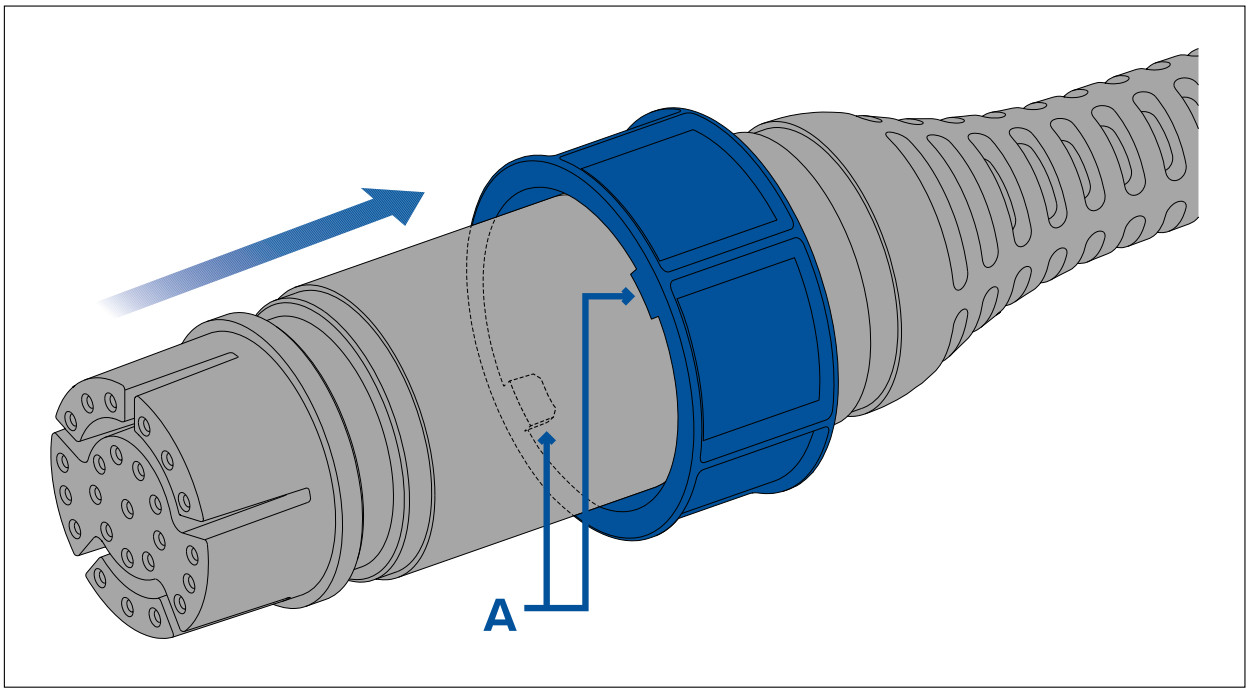

2. Slide the split-ring over the end of the connector, then push it towards the cable-end of the connector.

Important: Ensure that the tabs on the split-ring (labelled 'B' in the illustration), are closest to the cable-end of the connector.

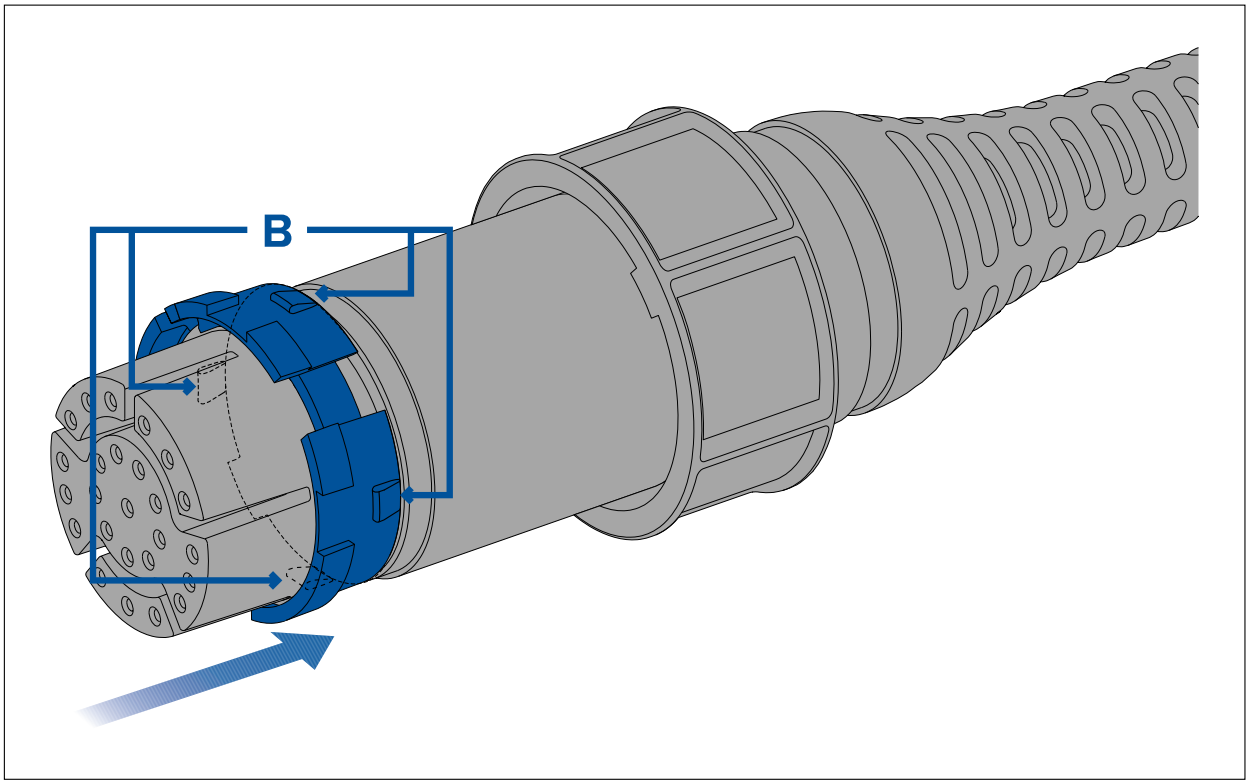

The split-ring slides easily for approximately 1 cm onto the connector, before butting up against the connector moulding.

3. Carefully insert the pointed end of the supplied tool into the split-ring's gap (labelled 'C' in the illustration).

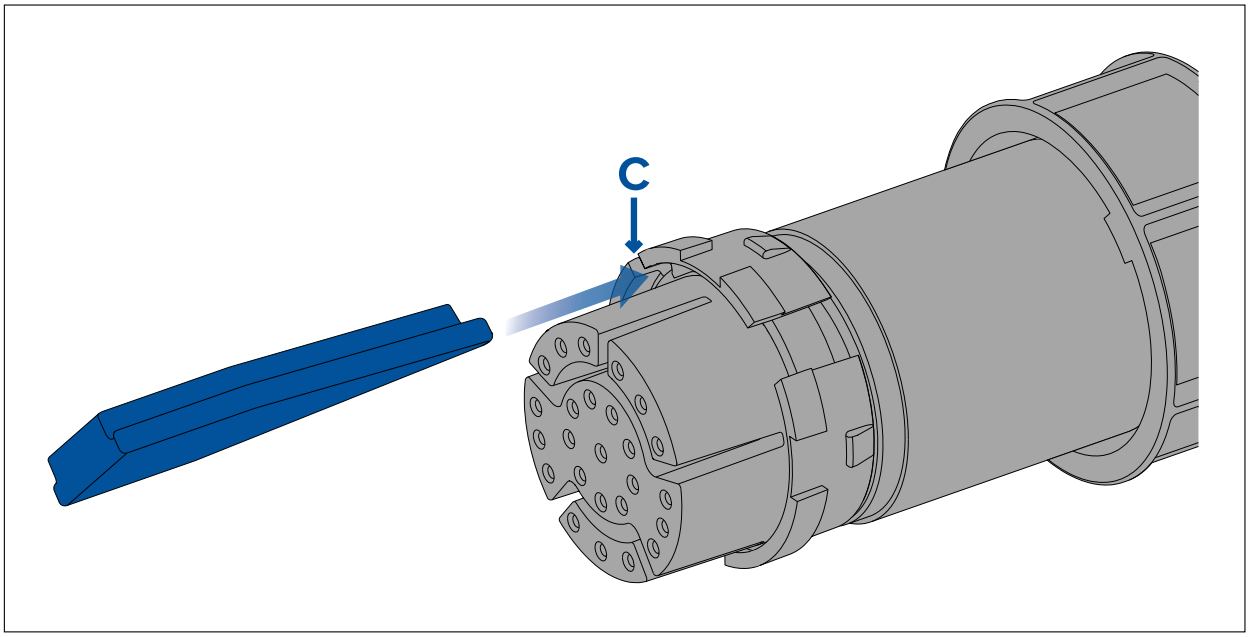

The tool widens the gap in the split ring, enabling the split ring to be pushed further back onto the connector in the following step.

Important:

- Always use the supplied tool when attaching the split ring. The split ring may become overstretched and break if you try to attach it without using the tool.
- A spare split ring is supplied with the locking collar assembly, in case of breakage.

4. Use the tool to gently lever the split ring over the moulding on the connector until it snaps into position approximately 0.5 cm further back towards the cable-end of the connector.

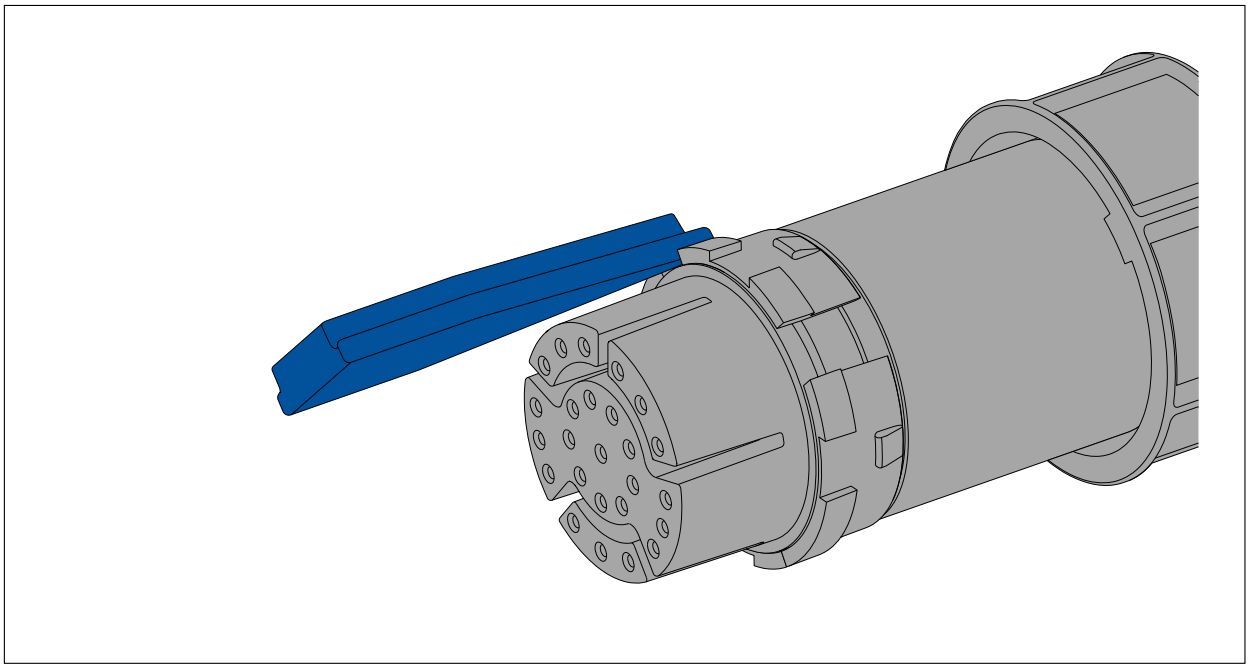

You can now remove the tool. The split-ring stays in position on the connector, but rotates freely.

5. Slide the O-ring (arrowed) over the end of the connector, and ensure that it is seated squarely against the connector moulding, adjacent to the split-ring.

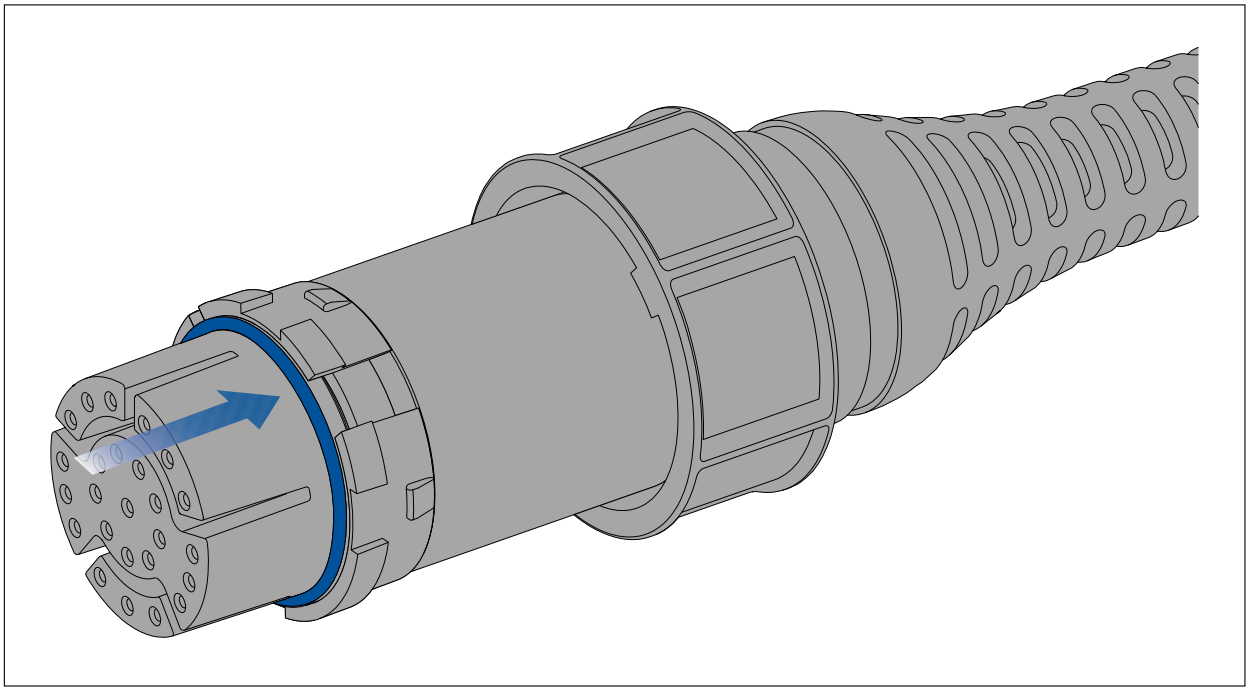

6. Slide the locking collar towards the plug-end of the connector, rotating the collar as necessary to ensure that the lugs on the locking collar (labelled ‘D’ in the illustration) pass through the channels (labelled ‘E’) in the split-ring.

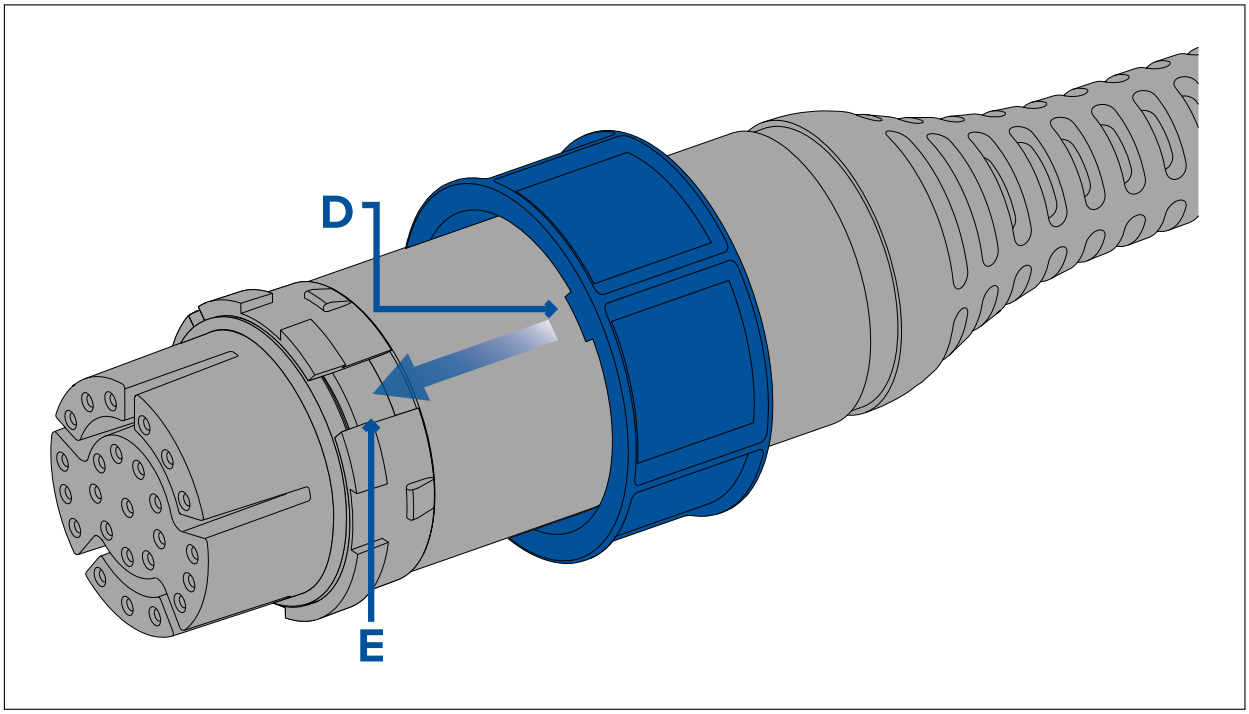

The locking collar slides easily towards the plug-end of the connector, before butting up against the split-ring moulding.

7. Grasp the body of the connector with one hand, then with the other hand, pull the locking collar firmly towards the plug-end of the connector.

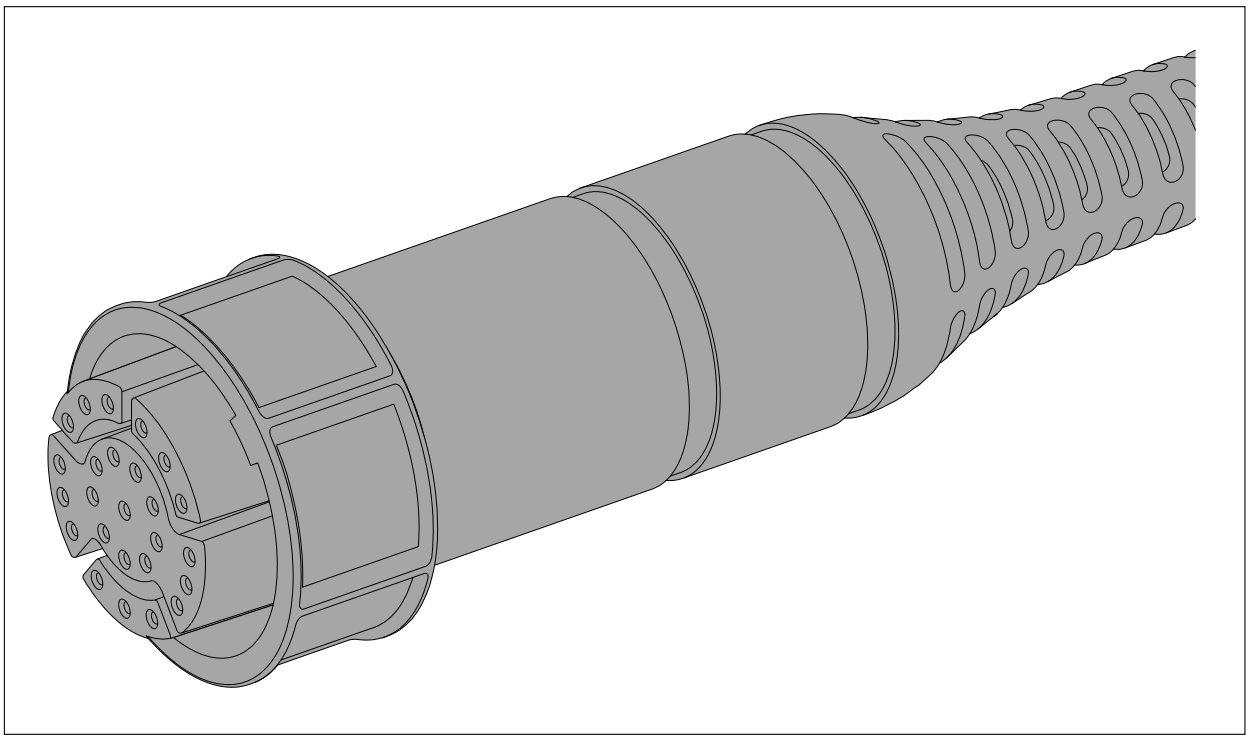

As you pull the locking collar, it clicks into place over the split-ring. The locking collar stays in position on the connector, but rotates freely.

4.4 Making connections

Follow the steps below to connect the transducer cable to a RealVision™ 3D sonar-capable device (for example, Axiom RV multifunction display).

1. Ensure that the vessel's power supply is switched off.
2. If your installation comprises split-pair transducers:

i. Connect the cable from each transducer to the Y-cable tails (A80478); check the colored labels on the cables to ensure that the transducers are connected to the correct Y-cable tail.
ii. Connect an extension cable to the remaining free plug on the Y-cable. See **RealVision™ 3D transducer extension cable**.

3. Ensuring correct orientation, push the transducer cable (or extension cable) connector fully onto the corresponding connector on the RealVision™ 3D sonar-capable device (for example, Axiom RV multifunction display).
4. Turn the locking collar clockwise to secure the cable.

Chapter 5: System checks and troubleshooting

Chapter contents

- 5.1 RealVision™ 3D AHRS calibration on page 38
- 5.2 Troubleshooting on page 38

5.1 RealVision™ 3D AHRS calibration

RealVision™ 3D transducers include a built-in AHRS (Attitude and Heading Reference Sensor), which measures the motion of your vessel to assist in the rendering of sonar images. After installation all RealVision™ 3D transducers require calibration.

An uncalibrated transducer can produce an offset to the front edge of the render of the bottom in the sonar image, as illustrated below.

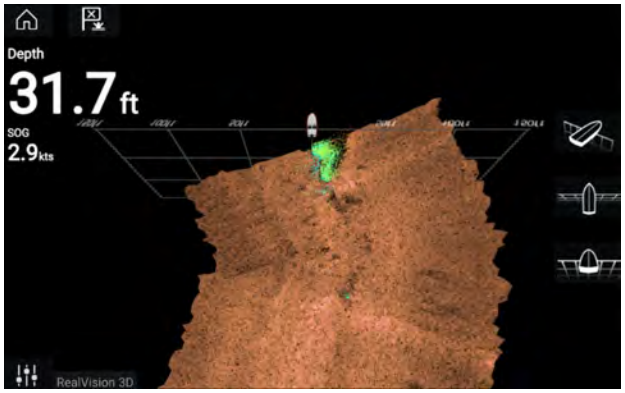	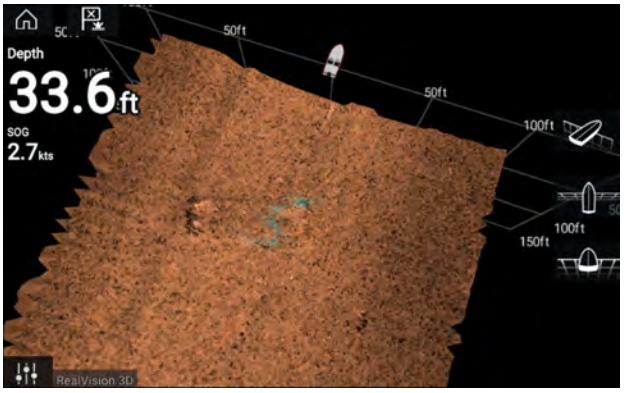
Uncalibrated	Calibrated

Calibration is an automatic process and starts after your vessel has turned approximately 100° at a speed of between 3 –15 knots. Calibration requires no user input, however at least a 270° turn is required before the calibration process can determine the local deviation and apply a relevant offset.

The time it takes to complete the calibration process will vary according to the characteristics of the vessel, the installation environment of the transducer, and the levels of magnetic interference at the time of conducting the process. Sources of significant magnetic interference may increase the time required to complete the calibration process. Certain areas with substantial magnetic deviation may require extra circles or “figure of 8” manoeuvres to be performed. Examples of such sources of magnetic interference include:

- Vessel engines
- Vessel alternators
- Marine pontoons
- Metal-hulled vessels
- Underwater cables

Note:

In some circumstances, it is beneficial to disable Realvision AHRS if local sources of magnetic interference are distorting the sonar image. Realvision AHRS can be disabled from **Settings**.

Menu > Settings > Sounder > AHRS stabilization

Note:

The Calibration process will require repeating after a **Sonar reset** or MFD **Factory reset**.

5.2 Troubleshooting

The troubleshooting information provides possible causes and corrective action required for common problems associated with installation and operation of your product.

Before packing and shipping, all Raymarine products are subjected to comprehensive testing and quality assurance programs. If you do experience problems with your product this section will help you to diagnose and correct problems in order to restore normal operation.

If after referring to this section you are still having problems with your product, please refer to the Technical support section of this manual for useful links and Raymarine Product Support contact details.

Operation instructions

For detailed operation instructions for your product, refer to the documentation that accompanies your display.

All product documentation is available to download from the Raymarine website: www.raymarine.com/manuals.

Sonar troubleshooting

Scrolling image is not being displayed

Possible causes	Possible solutions
Sonar disabled	Enable **Ping** from the Fishfinder app's sounder tab: **Menu** > **Settings** > **Sounder** > **Ping**.
Incorrect transducer selected	Check that the correct transducer is selected in the Fishfinder app's Transducer tab: **Menu** > **Settings** > **Transducer** > **Ping**.
Damaged cables	1. Check that the transducer cable connector is fully inserted and locked in position. 2. Check the power supply cable and connectors for signs of damage or corrosion, replace if necessary. 3. With the unit turned on, try flexing the cable near to the display connector to see if this causes the unit to re-boot/loose power, replace if necessary. 4. Check the vessel's battery voltage, the condition of the battery terminals and power supply cables, ensuring connections are secure, clean and free from corrosion, replace if necessary. 5. With the product under load, using a multi-meter, check for high voltage drop across all connectors/fuses etc (this can cause the Fishfinder applications to stop scrolling or the unit to reset/turn off), replace if necessary.
Damaged or fouled transducer	Check transducer condition, ensuring it is not damaged and is free from debris/fouling. If necessary, clean or replace your transducer. After cleaning or replacement coat the transducer using a water-based anti-fouling paint.
Wrong transducer fitted	Check product and transducer documentation and ensure that the transducer is compatible with your system.
External sonar module: SeaTalkhs / RayNet network problem.	• Check that the unit is correctly connected to the Display or network switch. Check all connections ensuring connections are secure, clean and free from corrosion, replace if necessary.
External sonar module: Software mismatch between equipment may prevent communication.	Ensure all Raymarine products contain the latest available software, check the Raymarine website: www.raymarine.com/software for software compatibility.

No depth reading / lost bottom lock

Possible causes	Possible solutions
Transducer location	Check that the transducer has been installed in accordance with the instructions provided with the transducer.
Transducer angle	If the transducer angle is too great the beam can miss the bottom, adjust transducer angle and recheck.
Transducer kicked-up	If the transducer has a kick-up mechanism, check that it has not kicked up due to hitting an object.
Power source insufficient	With the product under load, using a multi-meter, check the power supply voltage as close to the unit as possible to establish actual voltage when the current is flowing. (Check your product's Technical specification for power supply requirements.)

Possible causes	Possible solutions
Damaged or fouled transducer	Check transducer condition, ensuring it is not damaged and is free from debris/fouling. If necessary, clean or replace your transducer. After cleaning or replacement coat the transducer using a water-based anti-fouling paint.
Damaged cables	1. Check the unit's connector for broken or bent pins. 2. Check that the cable connector is fully inserted into the unit and that the locking collar is in the locked position. 3. Check the cable and connectors for signs of damage or corrosion, replace if necessary. 4. With the unit turned on, try flexing the power cable near to the display connector to see if this causes the unit to re-boot/loose power, replace if necessary. 5. Check the vessel's battery voltage, the condition of the battery terminals and power supply cables, ensuring connections are secure, clean and free from corrosion, replace if necessary. 6. With the product under load, using a multi-meter, check for high voltage drop across all connectors/fuses etc (this can cause the Fishfinder applications to stop scrolling or the unit to reset/turn off), replace if necessary.
Vessel speed too high	Slow vessel speed and recheck.
Bottom too shallow or too deep	The bottom depth may be outside of the transducers depth range, move vessel to shallower or deeper waters as relevant and recheck.

Poor / problematic image

Possible causes	Possible solutions
Targets will appear differently if your vessel is stationary (e.g.: fish will appear on the display as straight lines).	Increase vessel speed.
Scrolling paused or speed set too low	Unpause or increase sonar scrolling speed.
Sensitivity settings may be inappropriate for present conditions.	Check and adjust sensitivity settings or perform a Sonar reset.
Damaged cables	1. Check the unit's connector for broken or bent pins. 2. Check that the cable connector is fully inserted into the unit and that the locking collar is in the locked position. 3. Check the cable and connectors for signs of damage or corrosion, replace if necessary. 4. With the unit turned on, try flexing the power cable near to the display connector to see if this causes the unit to re-boot/loose power, replace if necessary. 5. Check the vessel's battery voltage, the condition of the battery terminals and power supply cables, ensuring connections are secure, clean and free from corrosion, replace if necessary. 6. With the product under load, using a multi-meter, check for high voltage drop across all connectors/fuses etc (this can cause the Fishfinder applications to stop scrolling or the unit to reset/turn off), replace if necessary.

Possible causes	Possible solutions
Transducer location	• Check that the transducer has been installed in accordance with the instructions provided with the transducer. • If a transom mount transducer is mounted too high on the transom it may be lifting out of the water, check that the transducer face is fully submerged when planing and turning.
Transducer kicked-up	If the transducer has a kick-up mechanism, check that it has not kicked up due to hitting an object.
Damaged or fouled transducer	Check transducer condition, ensuring it is not damaged and is free from debris/fouling. If necessary, clean or replace your transducer. After cleaning or replacement coat the transducer using a water-based anti-fouling paint.
Damaged transducer cable	Check that the transducer cable and connection is free from damage and that the connections are secure and free from corrosion.
Turbulence around the transducer at higher speeds may affect transducer performance	Slow vessel speed and recheck.
Interference from another transducer	1. Turn off the transducer causing the interference. 2. Reposition the transducers so they are farther apart.
Unit power supply fault	Check the voltage from the power supply, if this is too low it can affect the transmitting power of the unit.

Resetting the sonar module

You can use the reset function on a compatible Raymarine multifunction display to restore the sonar module to its factory default settings.

In the fishfinder application:

1. Select **Menu**.
2. Select **Set-up**.
3. Select **Sounder Set-up**.
4. Select **Sonar Reset**.
5. Select **Yes** to confirm or **No** to abort the operation, as appropriate.

The unit will now be reset to factory default settings.

Chapter 6: Maintenance

Chapter contents

- 6.1 Routine checks on page 44
- 6.2 Unit cleaning instructions on page 44
- 6.3 Re-applying anti-fouling paint on page 45

6.1 Routine checks

The following periodic checks should be made:

- Examine cables for signs of damage, such as chafing, cuts or nicks.
- Check that the cable connectors are firmly attached and that their locking mechanisms are properly engaged.

Note: Cable checks should be carried out with the power supply switched off.

Warning: High voltage

This product contains high voltage. Adjustments require specialized service procedures and tools only available to qualified service technicians. There are no user serviceable parts or adjustments. The operator should never remove the cover or attempt to service the product.

6.2 Unit cleaning instructions

The unit does not require regular cleaning. However, if you find it necessary to clean the unit, please follow the steps below:

1. Ensure power is switched off.
2. Wipe unit clean with a damp cloth.
3. If necessary, use a mild detergent solution to remove grease marks.

Transducer cleaning

You must clean your transducer regularly to remove organic growth. Organic growth can build up quickly on the bottom face of your transducer; this can impact transducer performance in a matter of weeks.

Important:

- When cleaning growth from an anti-fouled transducer, take care not to let paint dust and other debris enter the water, as this can have an impact on aquatic life.
- Take care not to scratch the surface of the transducer as this can impact transducer performance.
- Do NOT use harsh cleaning solvents such as acetone as this will damage the transducer.

Follow the guidance below to clean growth from your transducer:

- use a soft cloth and a mild household cleaning detergent to clean mild growth build up.
- use a scouring pad, such as a green Scotch Brite™ pad and a mild household cleaning detergent to clean moderate growth build up.
- you may need to use a fine grade wet and dry paper and a mild household cleaning detergent to clean severe build up.

Cleaning preventing bridging

On metal hulled vessels, to prevent galvanic corrosion, the metal parts of your stainless steel transducer must not touch the hull. The included fairing block and isolation parts ensures a gap exists between the two.

When cleaning your transducer particular attention must be given to the edge of the fairing block. Ensure that there is no growth or material attached that bridges the gap.

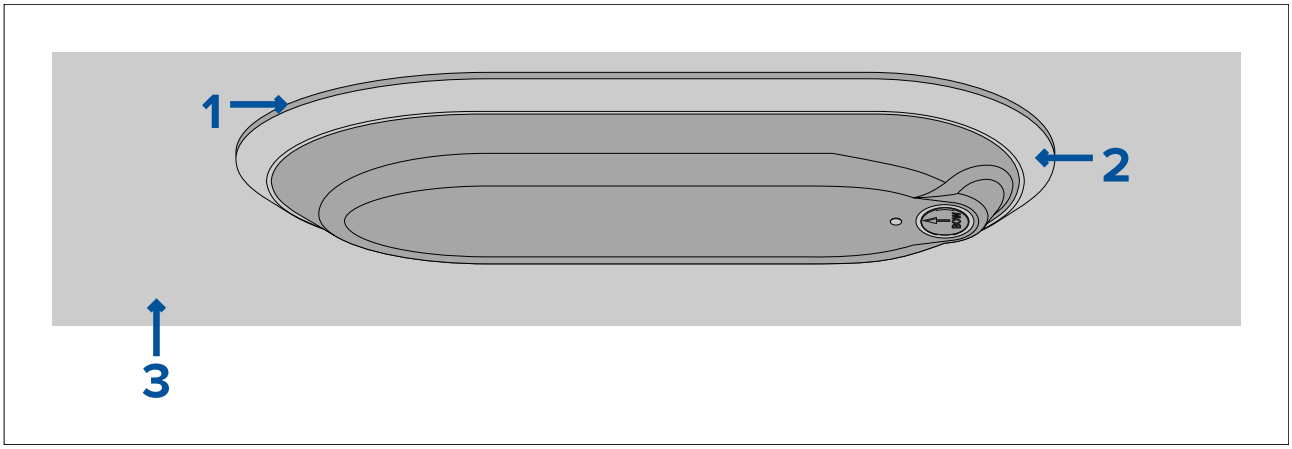

1. Fairing block.
2. Metal part of transducer
3. Metal hull

6.3 Re-applying anti-fouling paint

If you have applied anti-fouling paint to your transducer, it is important to re-apply it at least every 6 months, to maintain effectiveness.

Follow the instructions below to re-apply anti-fouling paint.

Important:

- Following environmental best practice, preparation and re-application of the anti-fouling paint should be performed using suitable washdown facilities, which ensures paint particles do not enter the water and impact aquatic life.
- Take care not to scratch the transducer face, as this may impact transducer performance.

1. Remove your vessel from the water.
2. Clean your transducer, ensuring all organic growth is removed.
3. Remove any flaking anti-foul paint.
4. Use a soft dry cloth to remove any loose bits of paint.
5. Re-apply a water-based anti-fouling paint.

Chapter 7: Technical support

Chapter contents

- 7.1 Raymarine product support and servicing on page 48
- 7.2 Learning resources on page 50

7.1 Raymarine product support and servicing

Raymarine provides a comprehensive product support service, as well as warranty, service, and repairs. You can access these services through the Raymarine website, telephone, and e-mail.

Product information

If you need to request service or support, please have the following information to hand:

- Product name.
- Product identity.
- Serial number.
- Software application version.
- System diagrams.

You can obtain this product information using diagnostic pages of the connected MFD.

Servicing and warranty

Raymarine offers dedicated service departments for warranty, service, and repairs.

Don't forget to visit the Raymarine website to register your product for extended warranty benefits: http://www.raymarine.co.uk/display/?id=788.

United Kingdom (UK), EMEA, and Asia Pacific:

- E-Mail: emea.service@raymarine.com
- Tel: +44 (0)1329 246 932

United States (US):

- E-Mail: rm-usrepair@flir.com
- Tel: +1 (603) 324 7900

Web support

Please visit the "Support" area of the Raymarine website for:

- **Manuals and Documents** — http://www.raymarine.com/manuals
- **Technical support forum** — http://forum.raymarine.com
- **Software updates** — http://www.raymarine.com/software

Worldwide support

United Kingdom (UK), EMEA, and Asia Pacific:

- Help desk: https://raymarine.custhelp.com/app/ask
- Tel: +44 (0)1329 246 777

United States (US):

- Help desk: https://raymarine.custhelp.com/app/ask
- Tel: +1 (603) 324 7900 (Toll-free: +800 539 5539)

Australia and New Zealand (Raymarine subsidiary):

- E-Mail: aus.support@raymarine.com
- Tel: +61 2 8977 0300

France (Raymarine subsidiary):

- E-Mail: support.fr@raymarine.com
- Tel: +33 (0)1 46 49 72 30

Germany (Raymarine subsidiary):

- E-Mail: support.de@raymarine.com
- Tel: +49 40 237 808 0

Italy (Raymarine subsidiary):

- E-Mail: support.it@raymarine.com
- Tel: +39 02 9945 1001

Spain (Authorized Raymarine distributor):

- E-Mail: sat@azimut.es

- Tel: +34 96 2965 102

Netherlands (Raymarine subsidiary):

- E-Mail: support.nl@raymarine.com
- Tel: +31 (0)26 3614 905

Sweden (Raymarine subsidiary):

- E-Mail: support.se@raymarine.com
- Tel: +46 (0)317 633 670

Finland (Raymarine subsidiary):

- E-Mail: support.fi@raymarine.com
- Tel: +358 (0)207 619 937

Norway (Raymarine subsidiary):

- E-Mail: support.no@raymarine.com
- Tel: +47 692 64 600

Denmark (Raymarine subsidiary):

- E-Mail: support.dk@raymarine.com
- Tel: +45 437 164 64

Russia (Authorized Raymarine distributor):

- E-Mail: info@mikstmarine.ru
- Tel: +7 495 788 0508

Viewing product information (LightHouse™ 3)

Use the **Settings** menu to view hardware and software information about your MFD, and connected products.

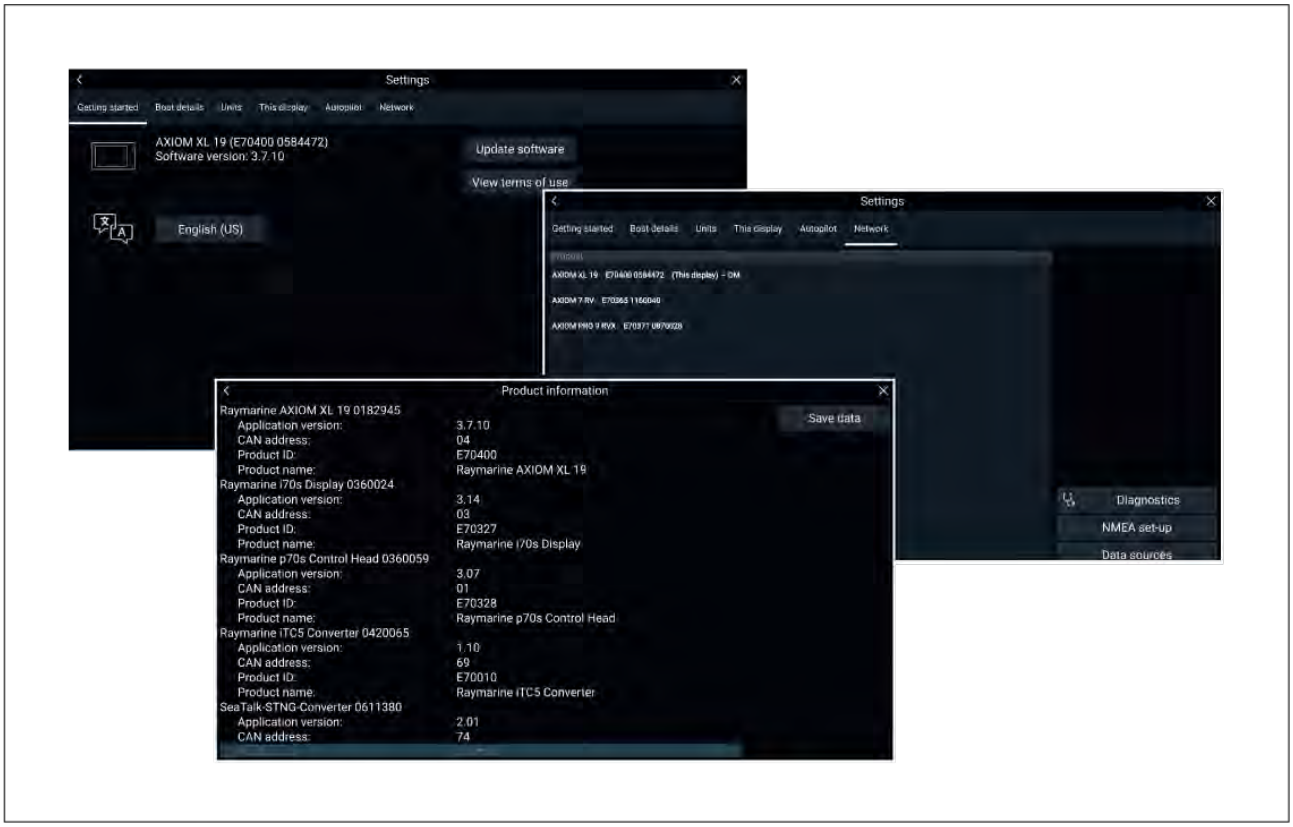

1. Select **Settings**, from the Homescreen.
   The **Getting started** menu contains hardware and software information for your MFD.
2. You can view further information about your MFD, or view information about products networked using SeaTalkhs ® and SeaTalkng ® / NMEA 2000, by selecting the **Network** tab, then:
   i. to display detailed software information and your MFD's network IP address, select your MFD from the list.

ii. to display detailed diagnostics information for all products, select **Product info** from the **Diagnostics** pop over menu.

7.2 Learning resources

Raymarine has produced a range of learning resources to help you get the most out of your products.

Video tutorials

Raymarine official channel on YouTube:

- YouTube

LightHouse™ 3 tips and tricks:

- Raymarine website

Video Gallery:

- Raymarine website

Note:

- Viewing the videos requires a device with an Internet connection.
- Some videos are only available in English.

Training courses

Raymarine regularly runs a range of in-depth training courses to help you make the most of your products. Visit the Training section of the Raymarine website for more information:

- http://www.raymarine.co.uk/view/?id=2372

Technical support forum

You can use the Technical support forum to ask a technical question about a Raymarine product or to find out how other customers are using their Raymarine equipment. The resource is regularly updated with contributions from Raymarine customers and staff:

- http://forum.raymarine.com

Chapter 8: Technical specification

Chapter contents

- 8.1 Technical specification on page 52

8.1 Technical specification

Physical specification

- **Dimensions:**
  - **Length:** 347.51 mm (13.68 in) — including fairing block
  - **Height:** 180 mm (7.09 in.) — including cable bend radius
  - **Width:** 114.00 mm (4.49 in) — including fairing block
- **Cable length:**
  - **RV-400:** 8 m (26.2 ft)
  - **RV-4xx (P/S):** 2 m (6.5 ft)
  - An 8 m (26.2 ft) extension cable is also supplied when ordering split pair transducer sets T70450 and T70451.
- **Weight:**
  - 3.12 kg (6.88 lb.)

Environmental specification

- **Operating temperature range:**
  - –2°C (28.4°F) to + 55°C (131°F)
- **Storage temperature range:**
  - –20°C (23°F) to + 70°C (158°F)
- **Waterproof rating:**
  - IPx6 (surfaces exterior to hull, only)
  - IPx7
  - IPx8

RealVision™ 3D sonar specification

The following specification only applies to RealVision™ 3D products.

- **Channels:**
  - 1 x CHIRP sonar
  - 1 x DownVision™
  - 1 x SideVision™
  - 1 x RealVision™ 3D
- **Range:**
  - CHIRP sonar = 0.6 M (2 ft) to 274 m (900 ft)
  - DownVision™ = 0.6 M (2 ft) to 183 m (600 ft)
  - SideVision™ = 0.6 M (2 ft) to 91 m (300 ft)
  - RealVision™ 3D = 0.6 M (2 ft) to 91 m (300 ft)

Conformance specification

- EN 60945:2002
- IEC 28846:1993
- EMC Directive 2014/30/EU
- Australia and New Zealand: C-Tick, Compliance Level 2

Chapter 9: Spares and accessories

Chapter contents

- 9.1 Spares on page 54
- 9.2 Accessories on page 54

9.1 Spares

- **R70615** — RealVision™ 3D 25–pin locking collar kit
- **R70743** — RealVision™ 3D RV-4xx Isolation kit

9.2 Accessories

- **A80702** — RealVision™ 3D Thru-hull Transducer High Speed Nose Cone
- **A80515** — RealVision™ 3D Transducer right-angled adapter cable 400 mm (15.7 in.)
- **A80475** — RealVision™ 3D Transducer extension cable 3 m (11.8 ft.)
- **A80476** — RealVision™ 3D Transducer extension cable 5 m (19.7 ft.)
- **A80477** — RealVision™ 3D Transducer extension cable 8 m (31.5 ft.)
- **A80478** — RealVision™ 3D Transducer Y-cable for connecting split pair transducers. Cable length: 0.3 m (0.98 ft.)

Index

A

Accessories 54
All-in-one 11
Anti-fouling 26, 45
Anti-fouling paint 26
Anti-rotation bolt cap. 24
Anti–rotation bolt 22–23

C

Cable
  Protection 30
  Strain relief 30
Cable extension 30
Cable length 21
Cable protector 25
Cable routing 30
Cables
  Split pair 14
Calibration
  RealVision™ 3D 38
Cleaning 44
Cleaning the transducer 44
Compatible products 12
Connections
  General cabling guidance 30
Contact details 48

D

Deadrise 11
Declaration of Conformity 7
Diagnostics 49
Dimensions 20
Documentation
  Installation instructions 10
  Mounting template 10
  Operation instructions 10, 39
Drilling holes 22

E

Electromagnetic Compatibility 20
EMC, *See* Electromagnetic Compatibility

H

Hull nut 25

I

Installation
  Multiple transducers 17
  Testing 16
  Tools required 16
IP address 49

L

LightHouse 3 10
LightHouse™ 3
  Tips and Tricks 50
Location requirements 17

M

Maintenance 7
Marine-grade sealant 24
Mounting 24
  Drilling holes 22

N

Nut sizes 21

O

Operation instructions 39
Operation instructions, LightHouse 3 10

P

Parts supplied, RV-4xx 13
Product information 49
Product overview 11
Product recycling (WEEE) 8
Product support 48

R

RealVision™ 3D transducer 10

S

Service Center 48
Servicing 7
Split-pair 11
Support forum 50

T

Technical specification 51–52
  Environmental 52
Technical Specification
  Conformance 52
  Physical 52
  RealVision 3D Sonar 52
Technical support 48, 50
Temperature range 52
Tools required 16
Training courses 50
Transducer cable length 13
Transducer location 18
Transducer orientation 19
Troubleshooting 38

V

Video Gallery 50

W

Warranty 48
WEEE Directive 8

CE

Raymarine
Marine House, Cartwright Drive, Fareham, Hampshire.
PO15 5RJ. United Kingdom.

Tel: +44 (0)1329 246 700

www.raymarine.com

Raymarine®

a brand by FLIR®